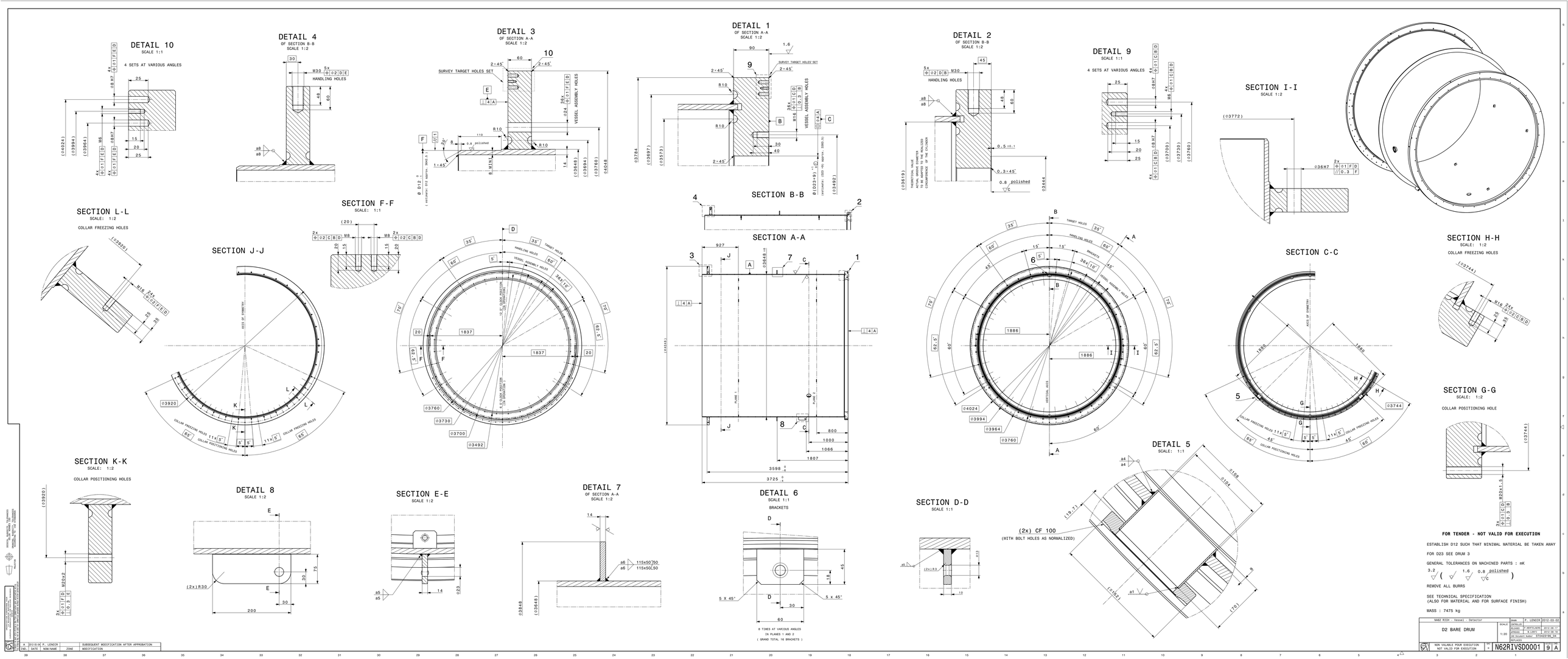
DETAIL 10
SCALE 1:1
4 SETS AT VARIOUS ANGLES
DETAIL 4
OF SECTION B-B
SCALE 1:2
HANDLING HOLES
DETAIL 3
OF SECTION A-A
SCALE 1:2
SURVEY TARGET HOLES SET
VESSEL ASSEMBLY HOLES
DETAIL 1
OF SECTION A-A
SCALE 1:2
SURVEY TARGET HOLES SET
VESSEL ASSEMBLY HOLES
DETAIL 2
OF SECTION B-B
SCALE 1:2
HANDLING HOLES
DETAIL 9
SCALE 1:1
4 SETS AT VARIOUS ANGLES
SECTION I-I
SCALE 1:2
SECTION L-L
SCALE: 1:2
COLLAR FREEZING HOLES
SECTION F-F
SCALE: 1:1
SECTION B-B
SECTION A-A
SECTION J-J
AXIS OF SYMMETRY
TARGET HOLES
HANDLING HOLES
VESSEL ASSEMBLY HOLES
BRACKETS
COLLAR FREEZING HOLES
COLLAR POSITIONING HOLES
SECTION C-C
SECTION H-H
SCALE: 1:2
COLLAR FREEZING HOLES
SECTION G-G
SCALE: 1:2
COLLAR POSITIONING HOLE
SECTION K-K
SCALE: 1:2
COLLAR POSITIONING HOLES
DETAIL 8
SCALE 1:2
SECTION E-E
SCALE 1:2
DETAIL 7
OF SECTION A-A
SCALE 1:2
DETAIL 6
SCALE 1:1
BRACKETS
8 TIMES AT VARIOUS ANGLES
IN PLANES 1 AND 2
(GRAND TOTAL 16 BRACKETS)
SECTION D-D
SCALE 1:1
DETAIL 5
SCALE: 1:1
(2x) CF 100
(WITH BOLT HOLES AS NORMALIZED)
FOR TENDER - NOT VALID FOR EXECUTION
ESTABLISH D12 SUCH THAT MINIMAL MATERIAL BE TAKEN AWAY
FOR D23 SEE DRUM 3
GENERAL TOLERANCES ON MACHINED PARTS : mK
REMOVE ALL BURRS
SEE TECHNICAL SPECIFICATION
(ALSO FOR MATERIAL AND FOR SURFACE FINISH)
MASS : 7475 kg
N62 RICH - Vessel - Detector
D2 BARE DRUM
1:20
NON VALABLE POUR EXECUTION
NOT VALID FOR EXECUTION
N62RIVSD0001
9
A
A 2012-03-06 P. LENDER SUBSEQUENT MODIFICATION AFTER APPROBATION