DETAIL E
SCALE: 1:1

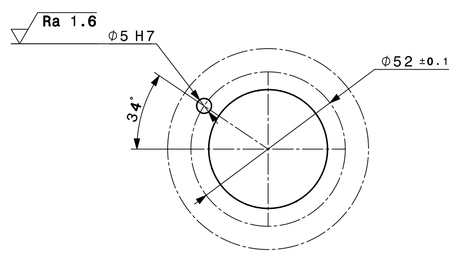

DETAIL F
SCALE: 1:1

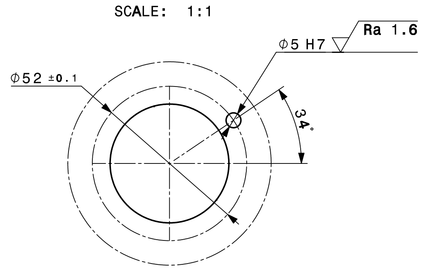

SECTION A-A
SCALE 1:10

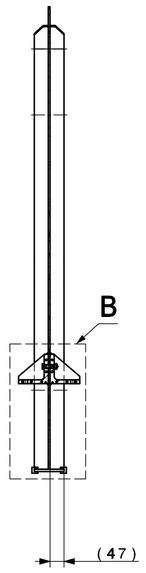

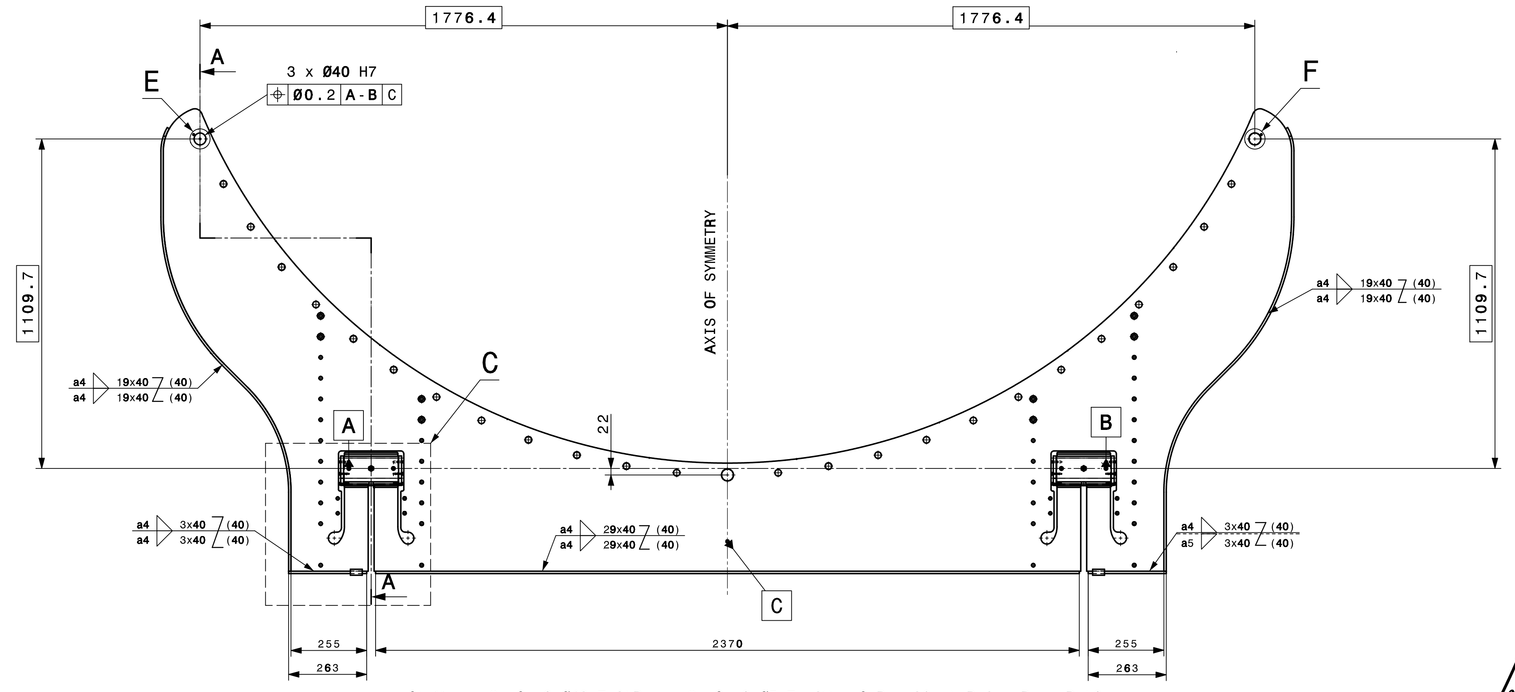

ONLY THE 3 HOLES Ø40H7 AND THE 2 HOLES Ø5H7 HAVE TO BE MACHINED AFTER WELDING
THEY ARE LOCATED FROM THE ACTUAL POSITIONS OF HOLES A, B, C

DETAIL B OF SECTION A-A
SCALE 1:1

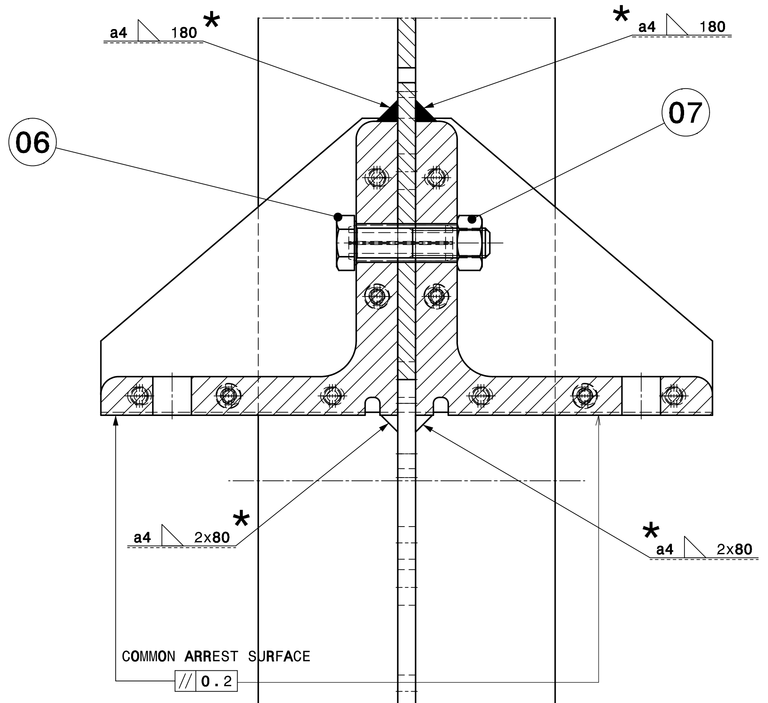

DETAIL C
SCALE 1:2

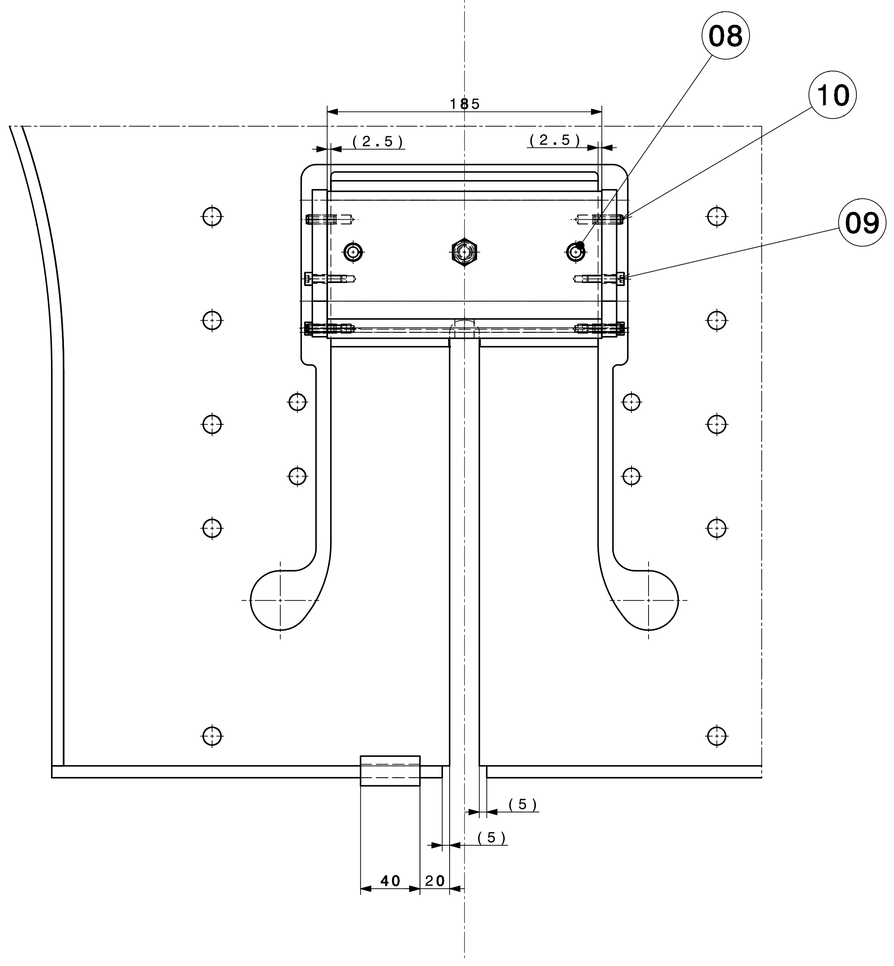

DETAIL D
SCALE 2:1

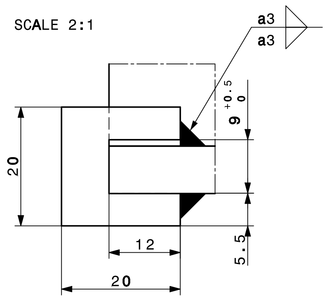

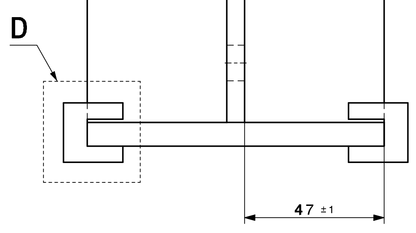

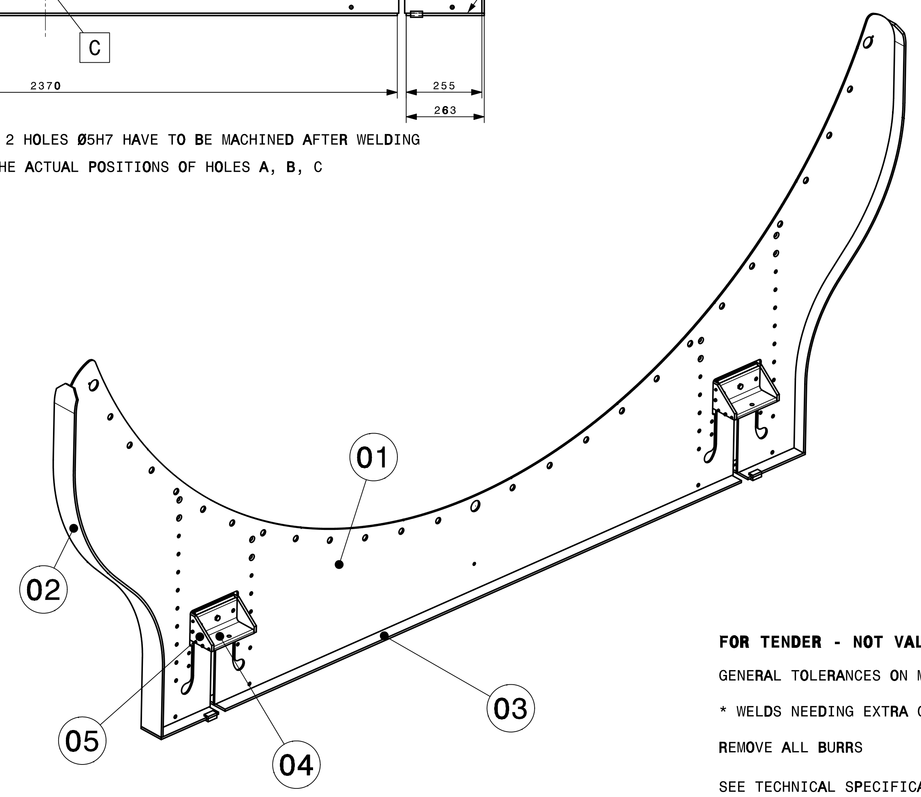

FOR TENDER - NOT VALID FOR EXECUTION

GENERAL TOLERANCES ON MACHINED PARTS : mK

* WELDS NEEDING EXTRA CARE (AGAINST SHEET S355)

REMOVE ALL BURRS

SEE TECHNICAL SPECIFICATION
(ALSO FOR MATERIAL AND FOR SURFACE FINISH)

MASS : 165 kg

QUA	DESCRIPTION	POS	MAT.	OBSERVATIONS	REF.CERN
24	SLOT HEAVY DUTY SPRING PIN 6X20 GOUPILLE ELAST FENDUE 6X20	10	Steel Acier	ISO 8752_6x20-St-Bk Traité, noirci | Black finished	
16	HEX SKT HD CAP SCREW_M5X20 VIS CHC_M5X20	9	Steel 8.8	ISO 4762_M5x20-8.8-AOC Zingué, jaune dichromaté | Zn yellow dichr	
4	SLOT HEAVY DUTY SPRING PIN 12X35 GOUPILLE ELAST FENDUE 12X35	8	Stainless Steel A2 Acier Inox A2	ISO 8752_12x35-A2	
2	HEX NUT STYLE1 GRADE A M10 ECROU H STYLE1 GRADE A M10	7	Steel 8 Acier 8	ISO 4032_M10-8-Bk Noirci oxydé | Black oxidized	47.43.81 100.5
2	HEX HD SCREW GRADE A_M10X45 VIS H GRADE A_M10X45	6	Steel 8.8	ISO 4014_M10x45-8.8-AOU Zingue | Zn coated	47.62.80 364.9
4	ANCHOR	5		N62RIVSD0010 ST0423398	
4	L BEAM	4		N62RIVSD0009 ST0423394	
1	FRONT SUPPORT LOWER RIBBON	3		N62RIVSD0033 ST0423422	
2	D2 FRONT SUPP. LATER.RIBBON	2		N62RIVSD0032 ST0423421	
1	D2 FRONT COLLAR BARE SHEET	1		N62RIVSD0003 ST0423214	

ENS/ASS — S.ENS/S.ASS

NA62 RICH - Vessel - Detector

D2 FRONT COLLAR WELDED SHEET

SCALE 1:10	DES/DRA.	A.PEREZ 2012-08-06
	CONTROLLED	- -
	RELEASED	P.MERTELAERS 2012-08-17
	APPROVED	M.LENTI 2012-08-18
	CAD Document Number	ST0425472_D2
	REPLACES	

RELEASED BY PROJECT LEADER OFFICE — FOR INFORMATION — DAC – — N62RIVSD0004 — SIZE 0 — IND.

DESSIN EN MILLIMETRES, TOLERANCES SELON ISO 2768-mK
DRAWING IN MILLIMETRES, TOLERANCES ACCORDING TO ISO 2768-mK

PROJECTION

CERN
EUROPEAN ORGANIZATION FOR NUCLEAR RESEARCH
ORGANISATION EUROPEENNE POUR LA RECHERCHE NUCLEAIRE
GENEVA SWITZERLAND
GENEVE SUISSE

THIS DOCUMENT IS THE PROPERTY OF CERN. IT MUST NOT BE REPRODUCED OR DISCLOSED WITHOUT WRITTEN AUTHORISATION FROM THE DG OF CERN.
CE DOCUMENT EST LA PROPRIETE DU CERN. IL NE DOIT PAS ETRE REPRODUIT OU COMMUNIQUE SANS AUTORISATION ECRITE DU DG DU CERN.