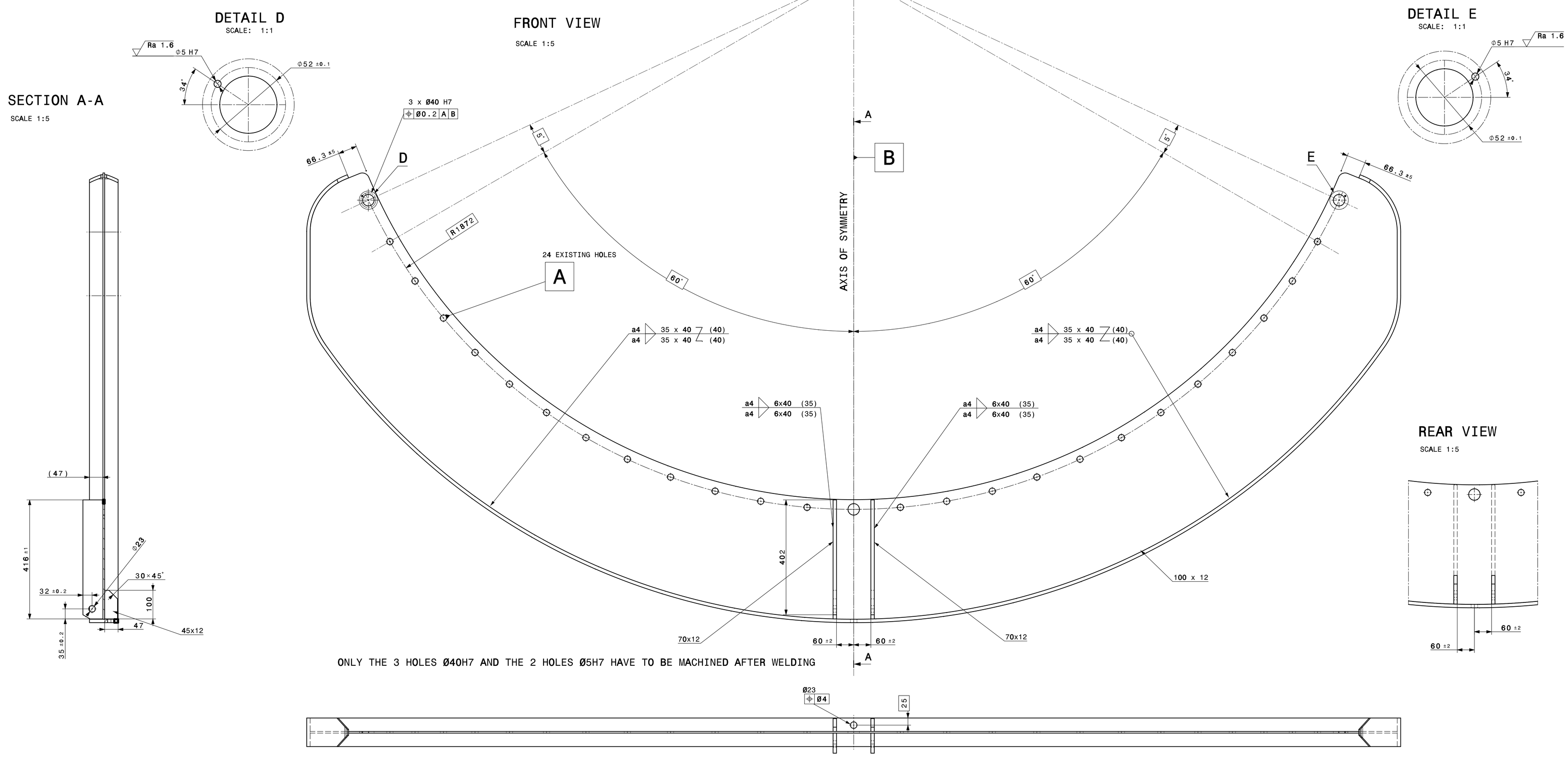

ONLY THE 3 HOLES Ø40H7 AND THE 2 HOLES Ø5H7 HAVE TO BE MACHINED AFTER WELDING

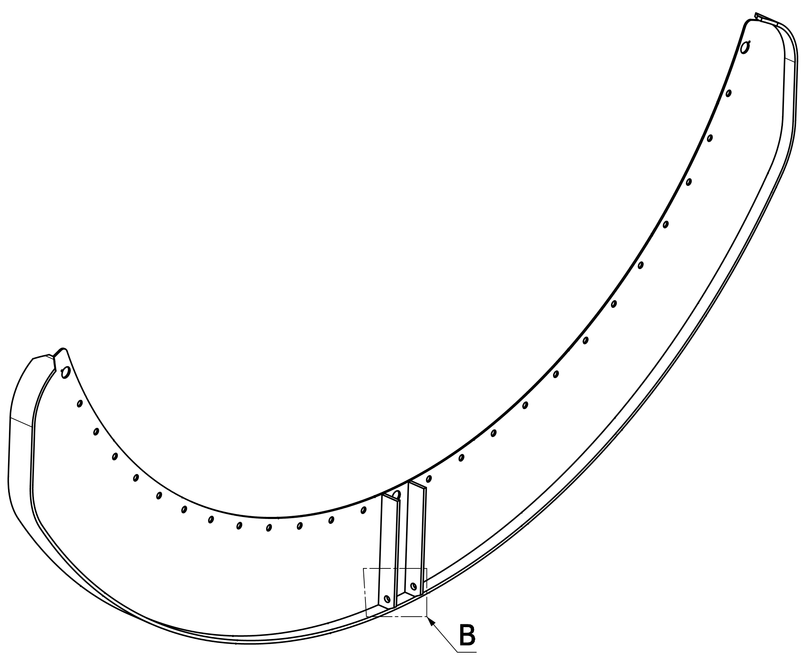

DETAIL B

SCALE 1:1

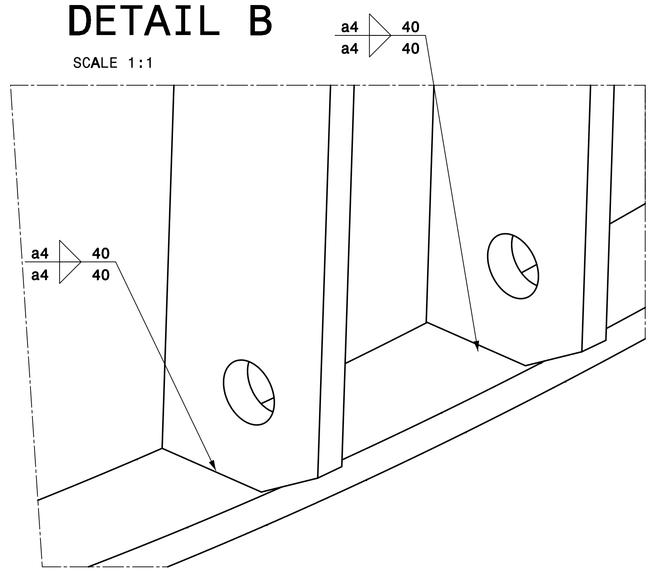

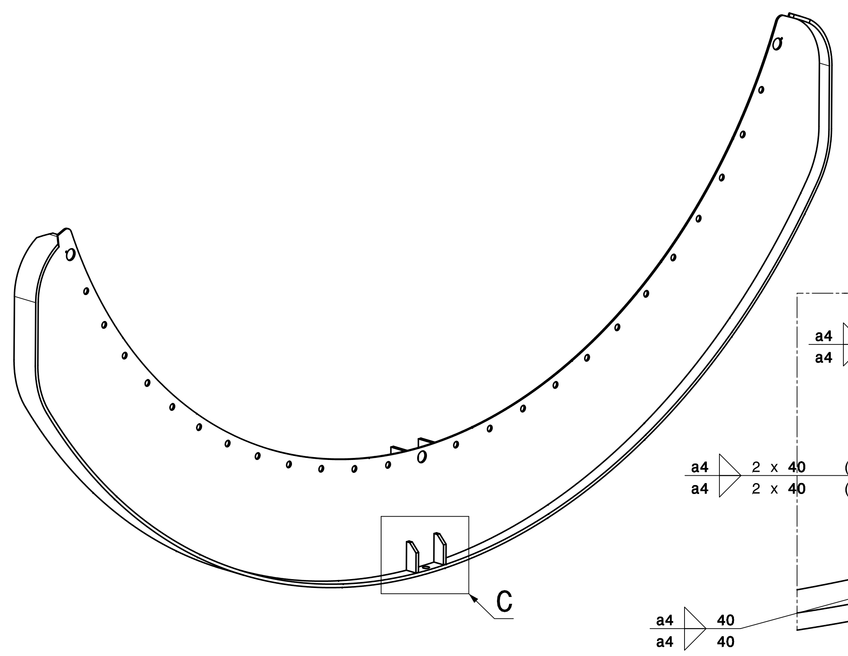

DETAIL C

SCALE 1:2

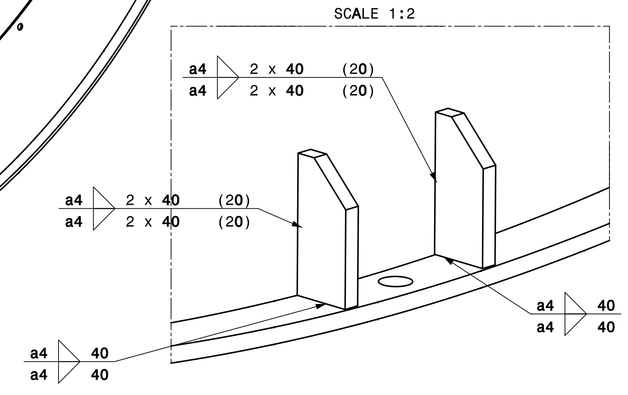

FOR TENDER - NOT VALID FOR EXECUTION

QUA	DESCRIPTION	POS	MAT.	OBSERVATIONS	REF.CERN
1	D2 REAR SUPP. PERIPH. RIBBON	2		N62RIVSD0015 / ST0423321	
1	D2 REAR COLLAR BARE SHEET	1		N62RIVSD0006 / ST0423320	

ENS/ASS — S.ENS/S.ASS

NA62 RICH - Vessel - Detector

D2 - REAR COLLAR WELDED SHEET

DES/DRA.	A.PEREZ	2012-09-06
CONTROLLED	-	-
RELEASED	P.MERTELMEIER	2012-08-17
APPROVED	M.LENTI	2012-08-18

SCALE 1:5

CAD Document Number: ST0425008_03

REPLACES

RELEASED BY: PROJECT LEADER OFFICE — FOR INFORMATION — DOC. – — N62RIVSD0007 — SIZE 0 — IND.

GENERAL TOLERANCES ACCORDING TO ISO STANDARDS

BURRS, BURSTS, TOLERANCES SLOPE ANGLES ISO

PROJECTION

ORGANIZATION EUROPEENNE POUR LA RECHERCHE NUCLEAIRE
EUROPEAN ORGANIZATION FOR NUCLEAR RESEARCH
CH-1211 GENEVE 23 - SUISSE
CERN - 1211 GENEVE 23 - SUISSE
TEL: +41 22 767 61 11 - TELEFAX: +41 22 767 65 00
TELEX: 419000 CH - TELEGRAM: CERNGVA