SECTION A-A

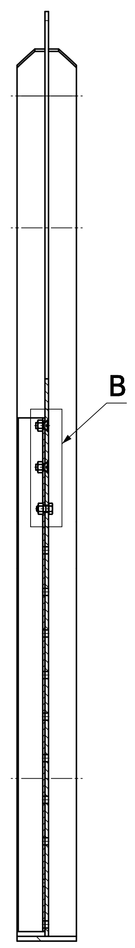

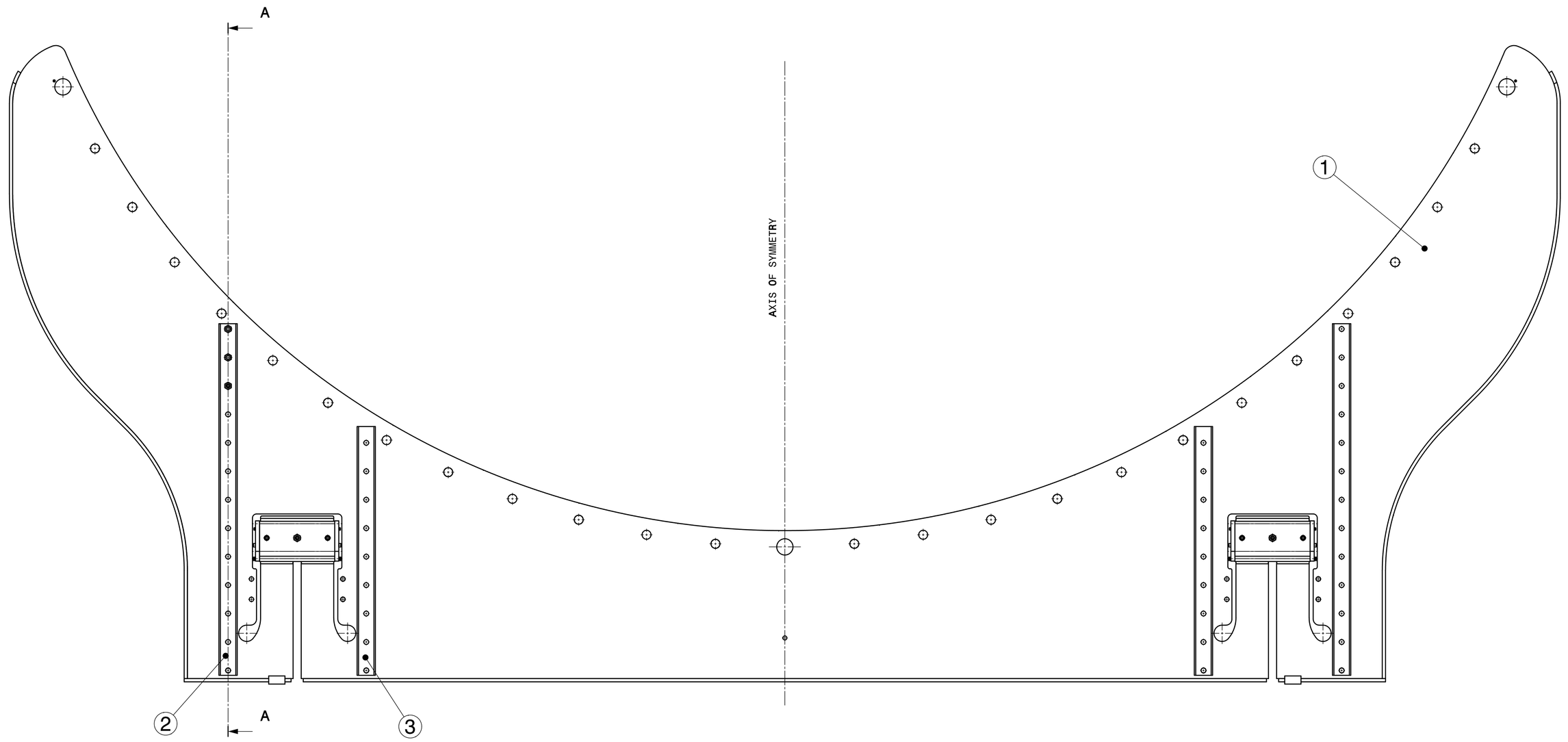

DETAIL B
SCALE: 1:1

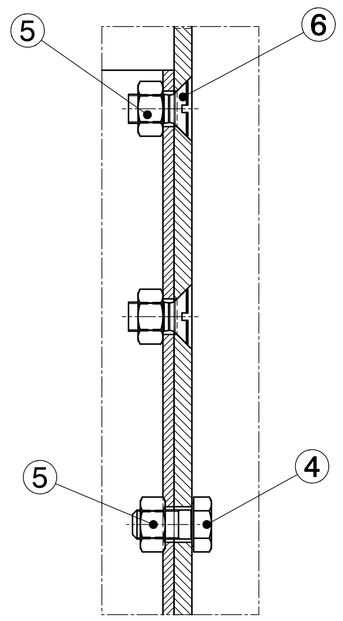

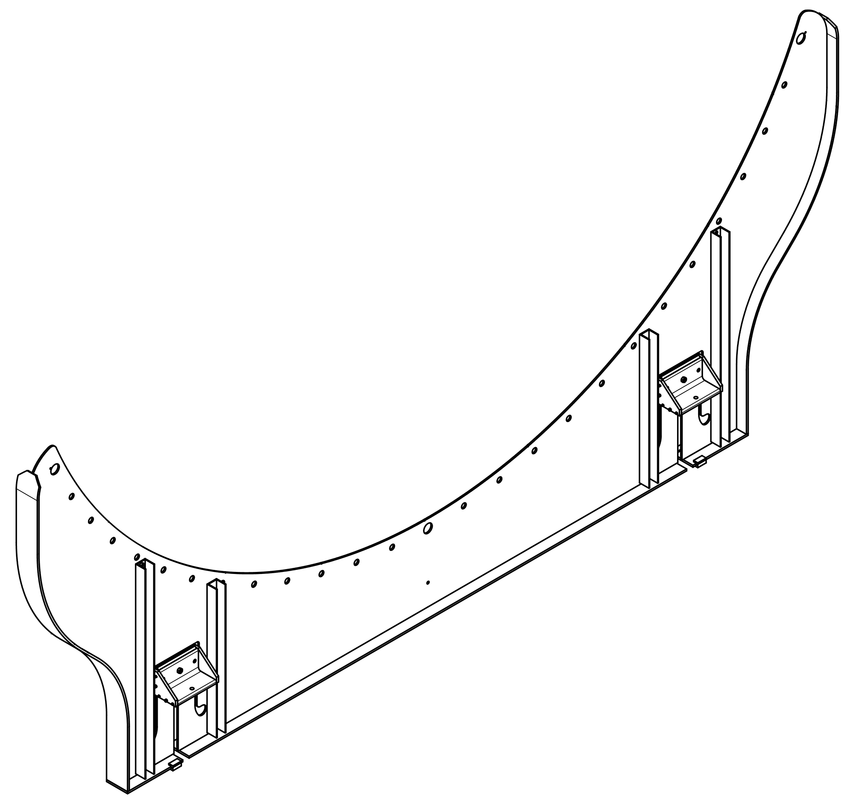

FOR TENDER - NOT VALID FOR EXECUTION

QUA	DESCRIPTION	POS	MAT.	OBSERVATIONS	REF.CERN
8	CSK SLOT FLAT HD SCREW M10X20	6	Steel 8.8	ISO 2009_M10x20-8.8-ADU	
	VIS TETE FEND FRAIS M10X20		Acier 8.8	Zingue | Zn coated	
40	HEX NUT STYLE1 GRADE A M10	5	Steel 8	ISO 4032_M10-8-Bk	47.43.81
	ECROU H STYLE1 GRADE A M10		Acier 8	Noirci oxyde | Black oxidized	100.5
32	HEX HD SCREW GRADE A M10X20	4	Steel 8.8	ISO 4017_M10x20-8.8-ADC	
	VIS H GRADE A M10X20		Acier 8.8	Zingue, jaune dichromate | Zn yellow dichr	
2	D2 CHANNEL BEAM SHORT	3		N62RIVSD0012	
				ST0423418	
2	D2 CHANNEL BEAM LONG	2		N62RIVSD0011	
				ST0423419	
1	D2 FRONT COLLAR WELDED SHEET	1		N62RIVSD0004	
				ST0425472	

ENS/ASS — S.ENS/S.ASS

NA62 RICH - Vessel - Detector

D2 FRONT SUPPORT COLLAR ASSEMBLY

DES/DRA.	A. PEREZ	2012-08-06
CONTROLLED		
RELEASED	P. MERTELMERS	2012-08-17
APPROVED	M. LENTI	2012-08-18

SCALE 1:5

CAD Document Number: ST0425418_02

REPLACES

RELEASED BY: PROJECT LEADER OFFICE | FOR INFORMATION | LAV. — | N62RIVSD0008 | SIZE 0 | IND.

DIMENSIONS, DURCISSEL, TOLERANCES
DIMENSIONS, ROUGHNESS, TOLERANCES
AMMESSI DA ISO 1101 E ISO 2768
PROJECTION