DETAIL B OF SECTION A-A

SCALE 1:1

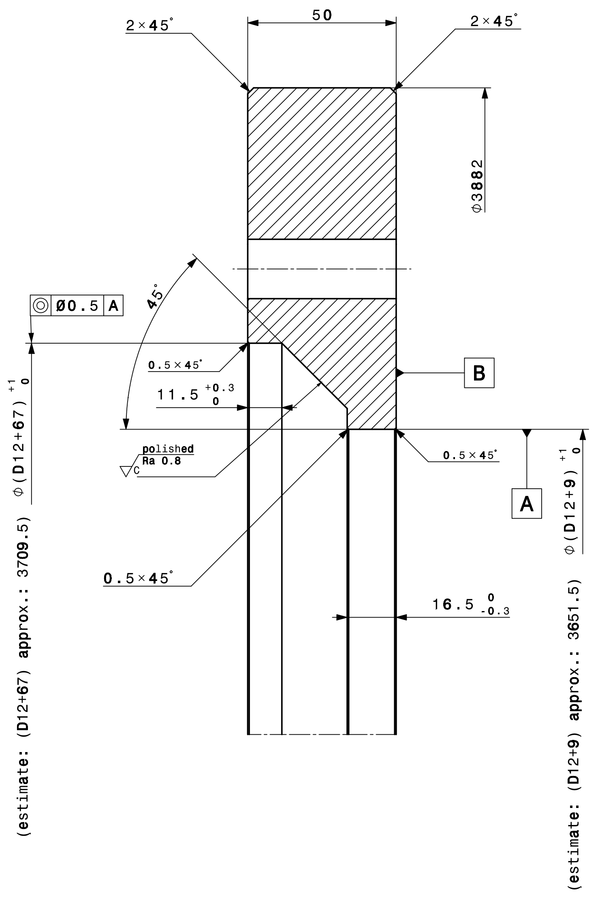

SECTION A-A

SCALE 1:10

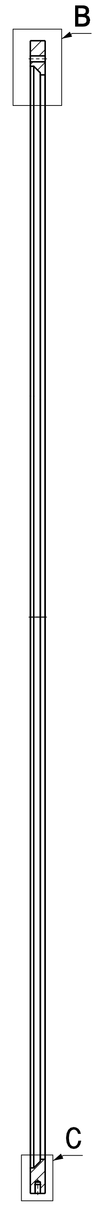

FRONT VIEW

SCALE 1:10

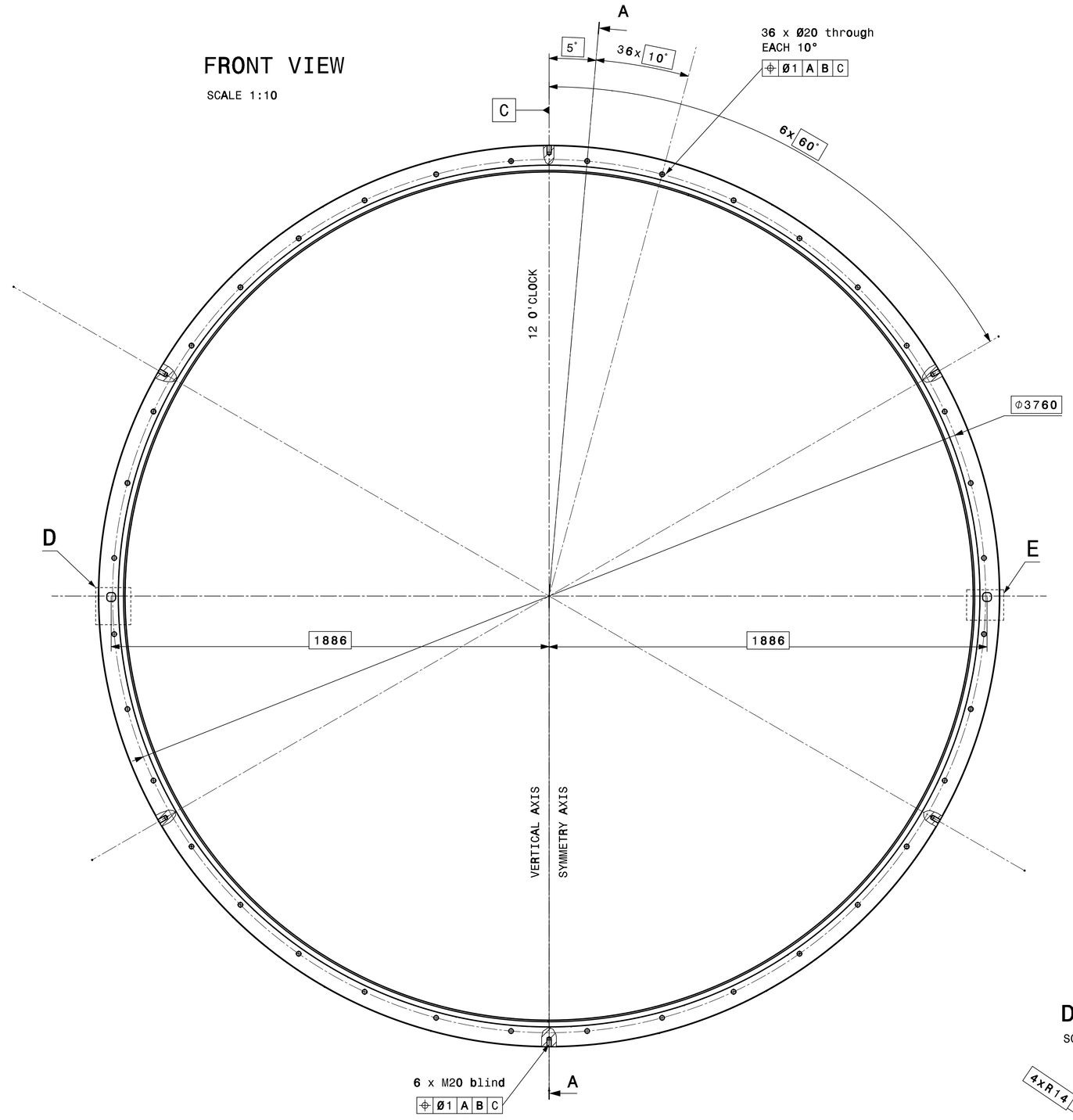

DETAIL C OF SECTION A-A

SCALE 1:1

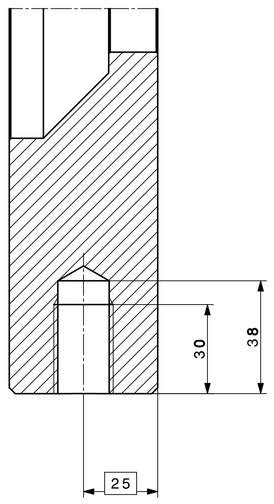

DETAIL D

SCALE 1:2

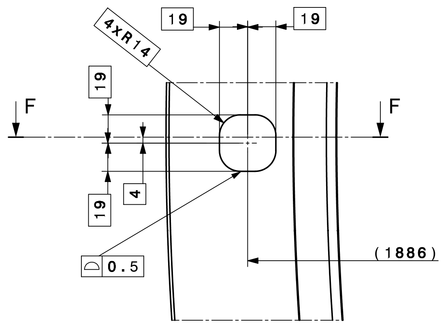

DETAIL E

SCALE 1:2

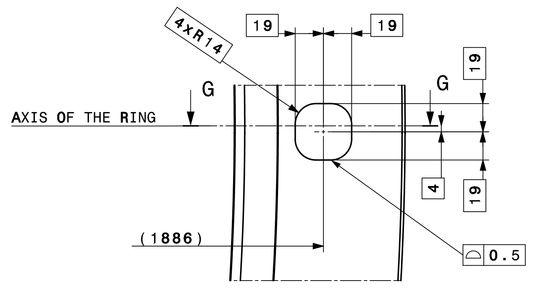

SECTION G-G OF DETAIL E

SCALE 1:2

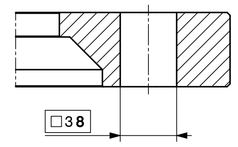

SECTION F-F OF DETAIL D

SCALE 1:2

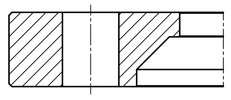

FOR TENDER - NOT VALID FOR EXECUTION

GENERAL TOLERANCES ON MACHINED PARTS : mK

Ra 3.2 (polished Ra 0.8)

REMOVE ALL BURRS

SEE TECHNICAL SPECIFICATION
(ALSO FOR MATERIAL AND FOR SURFACE FINISH)

NA62 RICH - Vessel - Detector		DES/DRA	A. PEREZ	2012-08-06
PRESSURE RING 1-2	SCALE 1:10	CONTROLLED	-	
		RELEASED	P. MERTELAERS	2012-08-17
		APPROVED	M. LENTI	2012-08-18
		CAD Document Number	ST0423230_02	
		REPLACES		
RELEASED BY PROJECT LEADER OFFICE	FOR INFORMATION	DAC -	N62RIVSD0014	SIZE 0 IND.

DIMENSIONS, SURFACES, TOLERANCES
DRAWING, ROUGHNESS, TOLERANCES
ACCORDING TO ISO STANDARDS

PROJECTION

CERN
EUROPEAN ORGANIZATION FOR NUCLEAR RESEARCH
GENEVA, SWITZERLAND