A-A

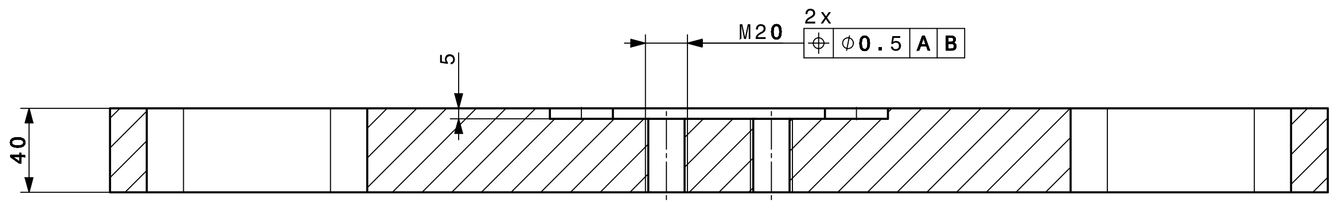

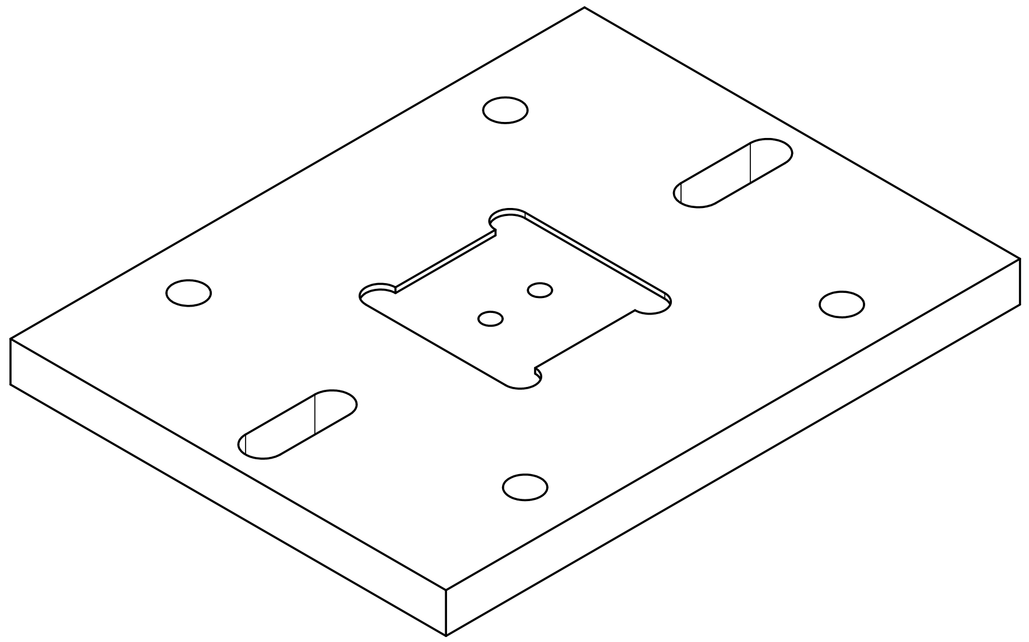

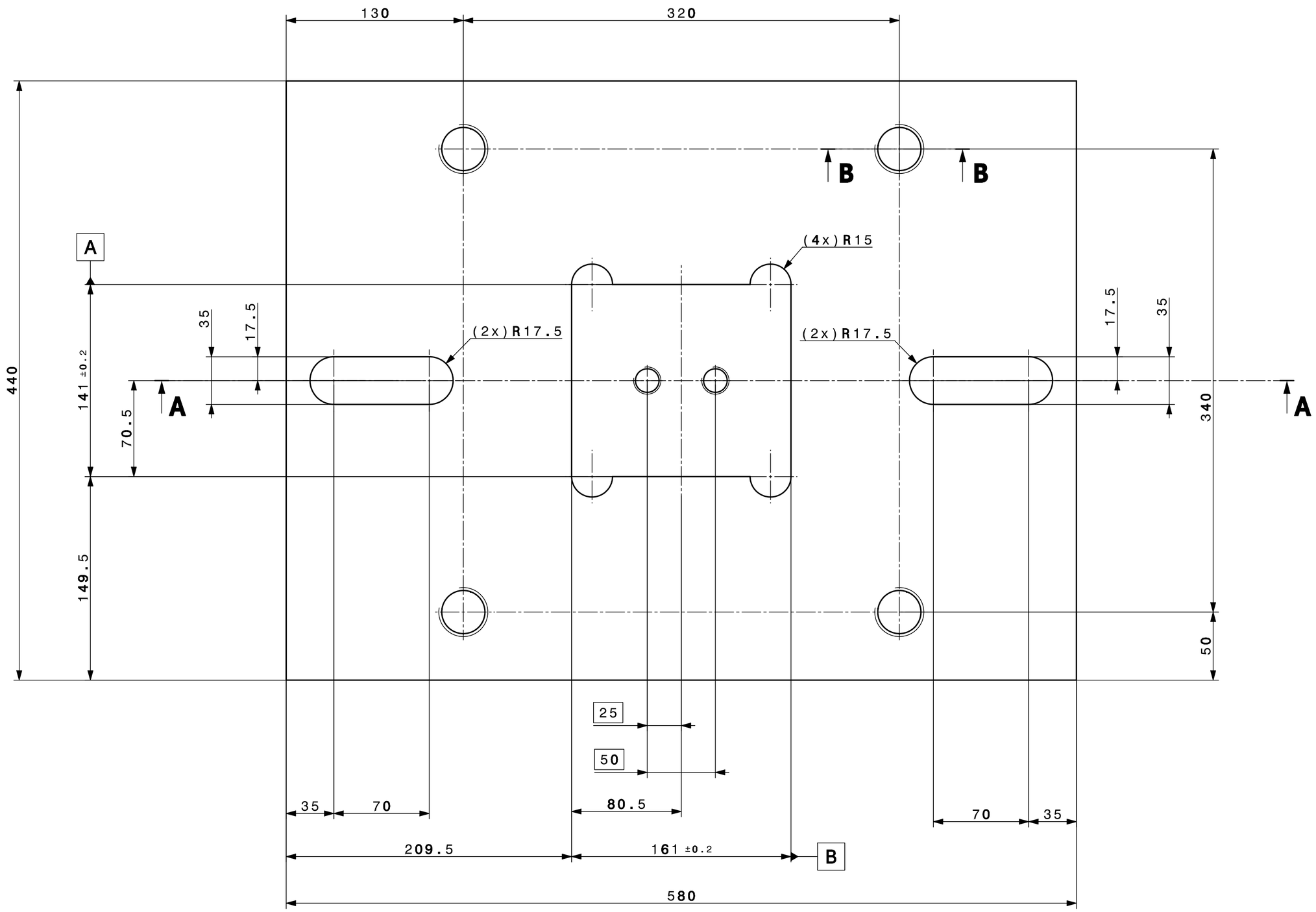

B-B

SCALE: 1:1

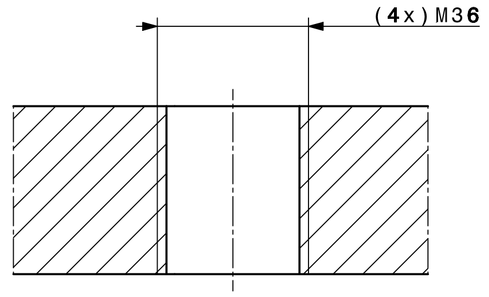

FOR TENDER - NOT VALID FOR EXECUTION

GENERAL TOLERANCES ON MACHINED PARTS : mK

Ra 3.2

REMOVE ALL BURRS

SEE TECHNICAL SPECIFICATION
(ALSO FOR MATERIAL AND FOR SURFACE FINISH)

MASS : 77.4 kg

NA62 RICH - Vessel - Detector	DES/DRA.	A.PEREZ	2012-08-06
	CONTROLLED	-	-
D4 PEDESTAL PLATE REAR	RELEASED	P.WERTELAERS	2012-08-17
SCALE 1:2	APPROVED	M.LENTI	2012-08-18
	CAD Document Number	ST0434641_02	
	REPLACES		

RELEASED BY PROJECT LEADER OFFICE | FOR INFORMATION | QAC - | N62RIVSD0017 | SIZE 1 | IND.

DESSIN, RUGOSITE, TOLERANCES SELON NORMES ISO
DRAWING, RUGOSITY, TOLERANCES ACCORDING TO ISO STANDARDS

PROJECTION

ORGANISATION EUROPEENNE POUR LA RECHERCHE NUCLEAIRE
EUROPEAN ORGANIZATION FOR NUCLEAR RESEARCH
GENEVE

Ce document ne peut être utilisé ou communiqué sans autorisation écrite
This document may not be used or communicated without written permission