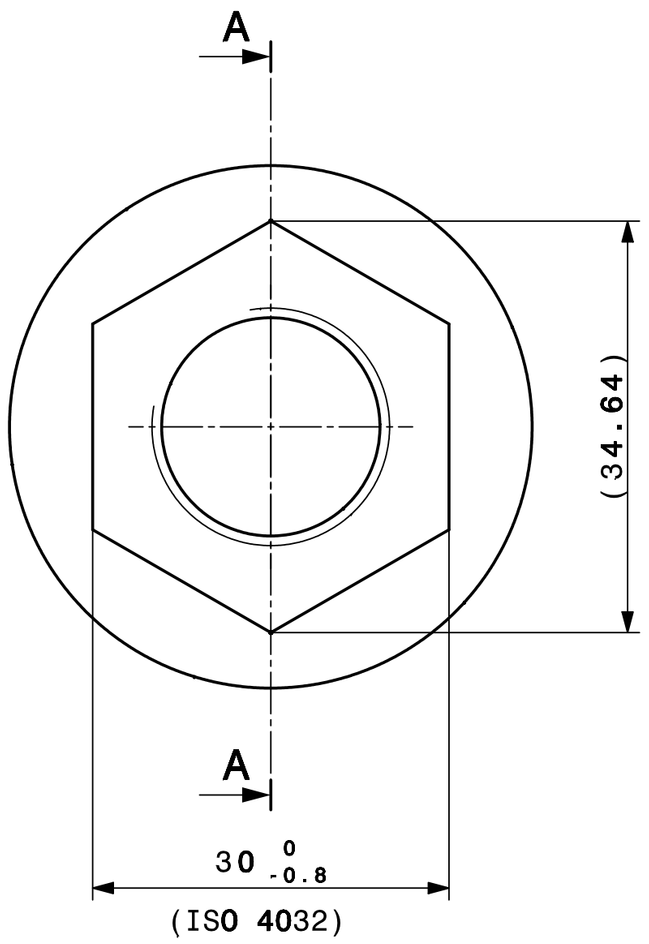

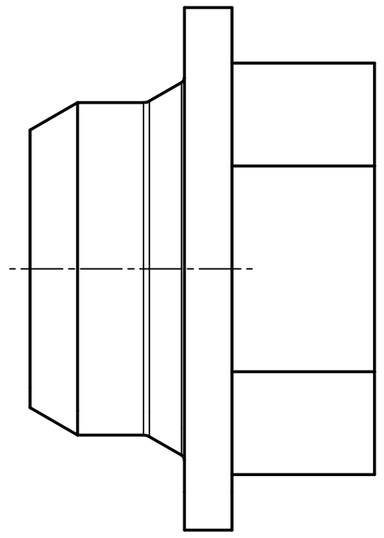

SECTION A-A

SCALE 2:1

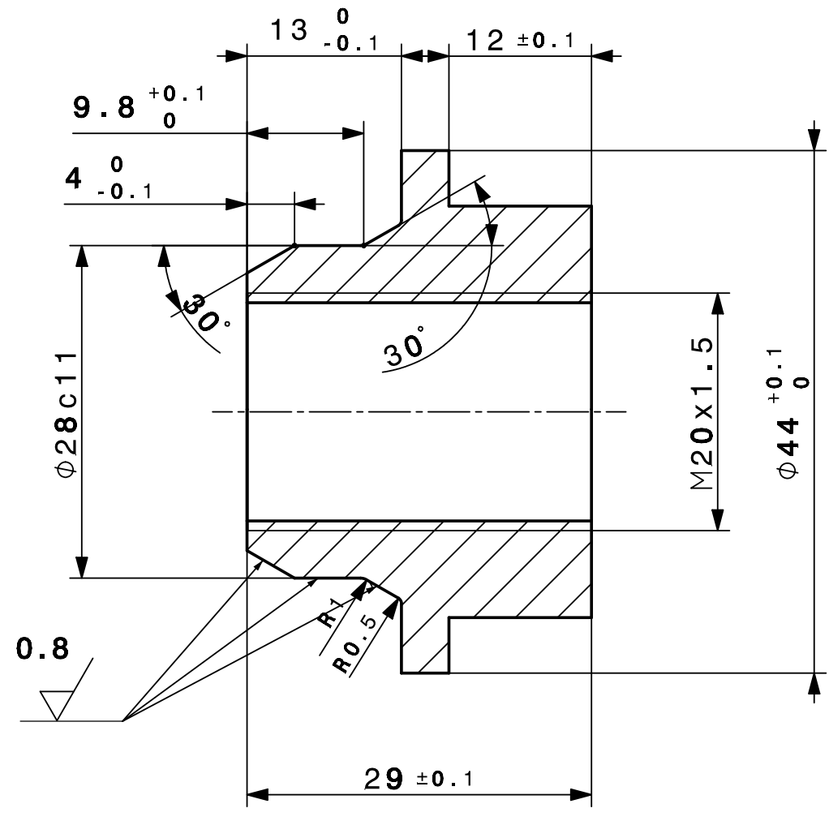

FOR TENDER - NOT VALID FOR EXECUTION

GENERAL TOLERANCES ON MACHINED PARTS : mK

Ra 1.6 (Ra 0.8)

REMOVE ALL BURRS

SEE TECHNICAL SPECIFICATION
(ALSO FOR MATERIAL AND FOR SURFACE FINISH)

NA62 RICH - Vessel - Detector		DES/DRA.	P.LENOIR	2012-07-30
DRUM MATING NUT	SCALE 2:1	CONTROLLED	-	-
		RELEASED	P.WERTELAERS	2012-08-17
		APPROVED	M.LENTI	2012-08-18
		CAD Document Number	ST0423335_02	
		REPLACES		
RELEASED BY PROJECT LEADER OFFICE	FOR INFORMATION	GAC –	N62RIVSD0018	SIZE 2 IND.

DESSIN, RUGOSITE, TOLERANCES SELON NORMES ISO
DRAWING, RUGOSITY, TOLERANCES ACCORDING TO ISO STANDARDS

PROJECTION

ORGANISATION EUROPEENNE POUR LA RECHERCHE NUCLEAIRE
EUROPEAN ORGANIZATION FOR NUCLEAR RESEARCH
GENEVE

Ce dessin ne peut etre utilise a des fins commerciales sans autorisation ecrite
This drawing may not be used for commercial purposes without written authorisation