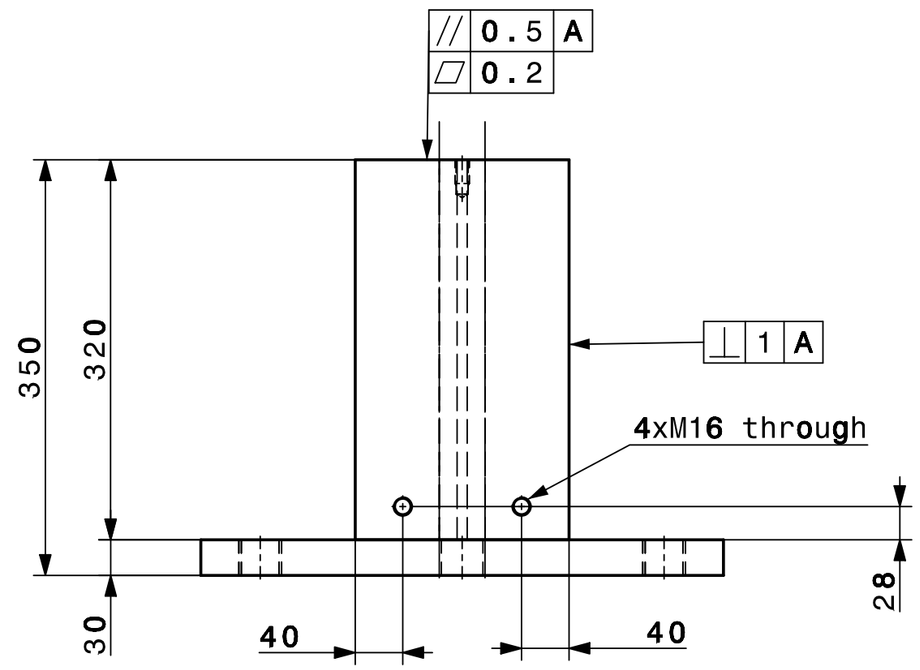

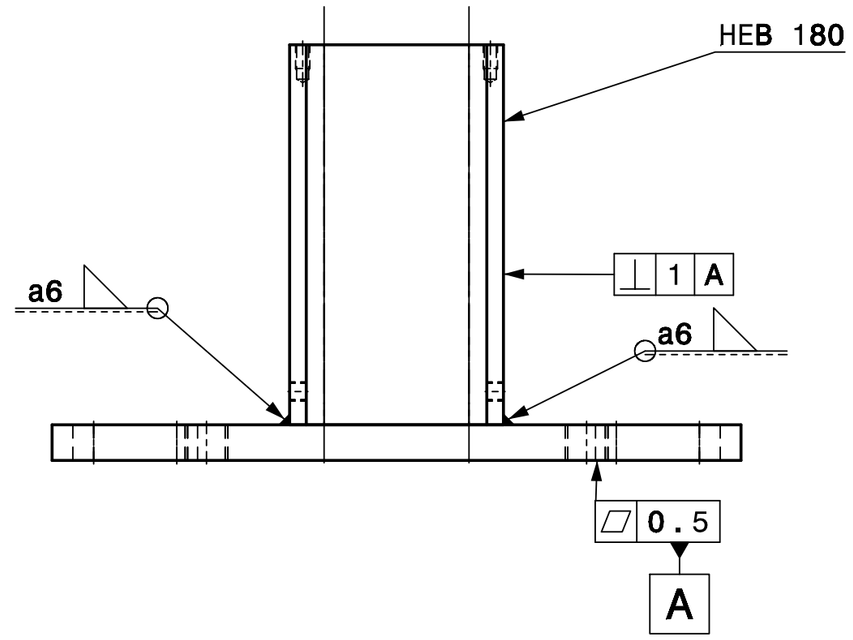

SECTION A-A
SCALE 1:5

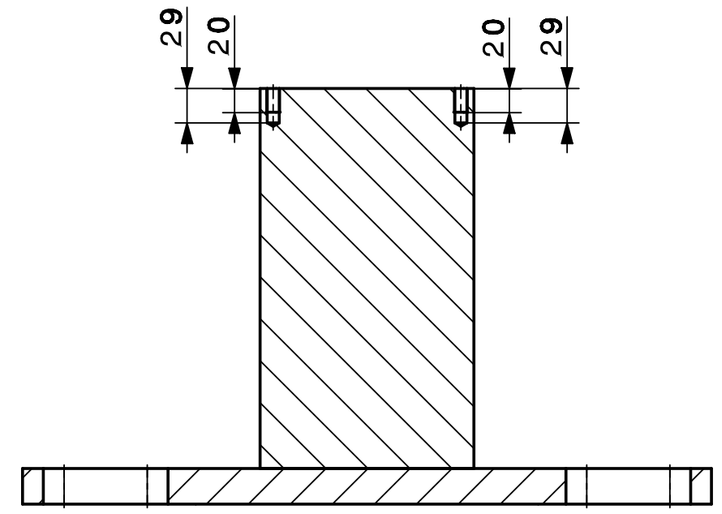

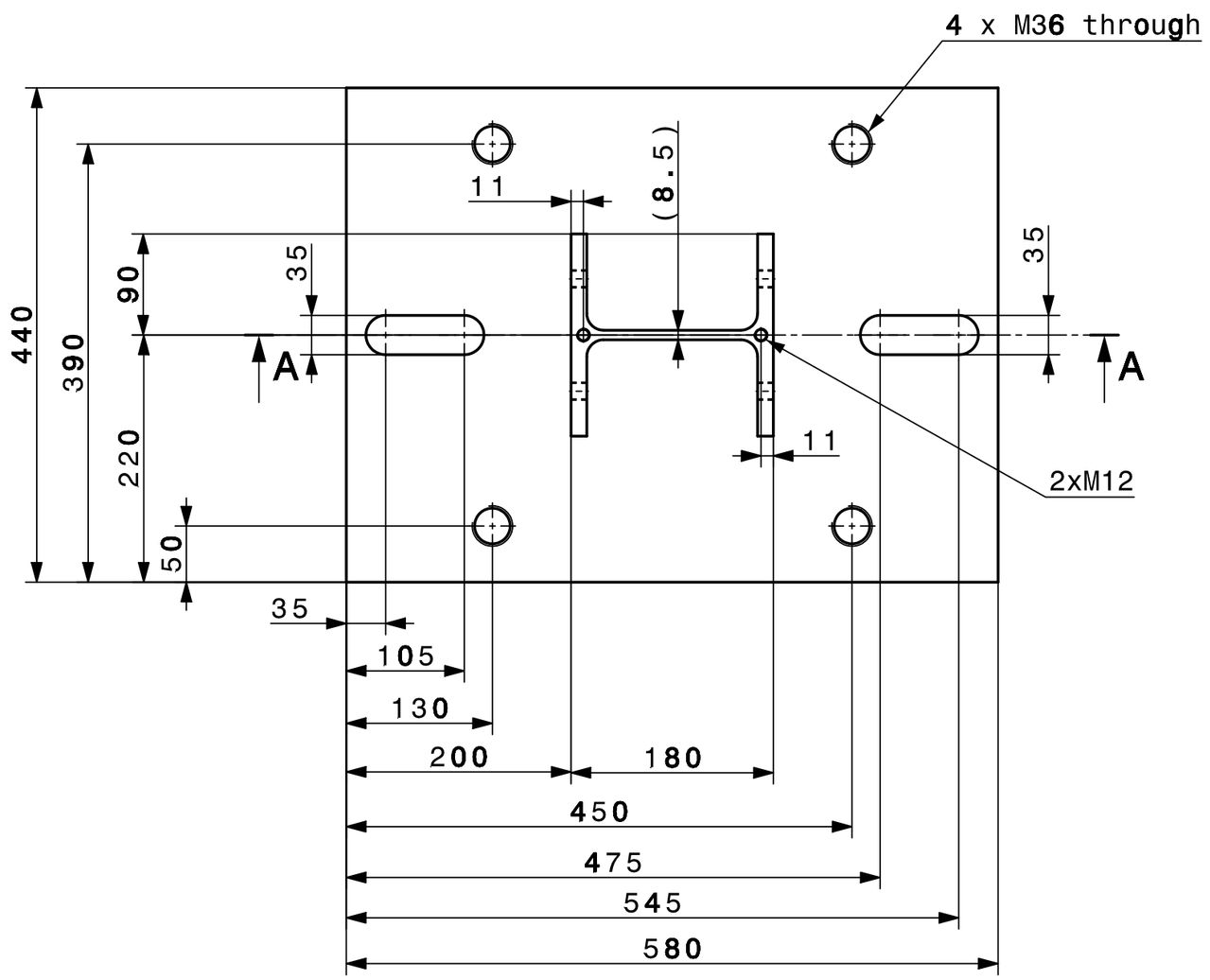

FOR TENDER - NOT VALID FOR EXECUTION

GENERAL TOLERANCES ON MACHINED PARTS : mK

Ra 1.6

REMOVE ALL BURRS

SEE TECHNICAL SPECIFICATION
(ALSO FOR MATERIAL AND FOR SURFACE FINISH)

A	2012-08-29	A. Perez		UPDATE
IND.	DATE	NOM/NAME	ZONE	MODIFICATION

NA62 RICH - Vessel - Detector

PEDESTAL

SCALE 1:5

DES/DRA.	A.PEREZ	2012-08-06
CONTROLLED	-	-
RELEASED	P.WERTELAERS	2012-08-29
APPROVED	M.LENTI	2012-08-30

CAD Document Number ST0425013_02

REPLACES

RELEASED BY PROJECT LEADER OFFICE | FOR INFORMATION | QAC – | N62RIVSD0022 | SIZE 2 | IND. A

DESSIN, RUGOSITE, TOLERANCES SELON NORMES ISO
DRAWING, RUGOSITY, TOLERANCES ACCORDING TO ISO STANDARDS

PROJECTION

ORGANISATION EUROPEENNE POUR LA RECHERCHE NUCLEAIRE
EUROPEAN ORGANIZATION FOR NUCLEAR RESEARCH
GENEVE

Ce dessin ne peut être utilisé à des fins commerciales sans autorisation écrite
This drawing may not be used for commercial purposes without written authorisation