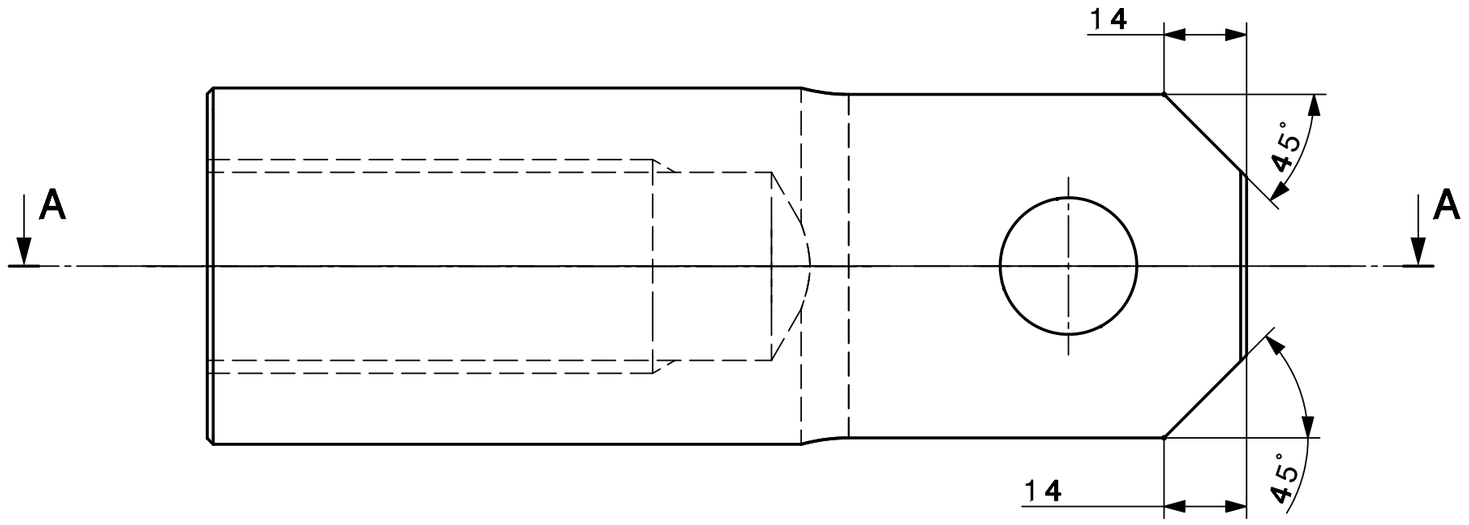

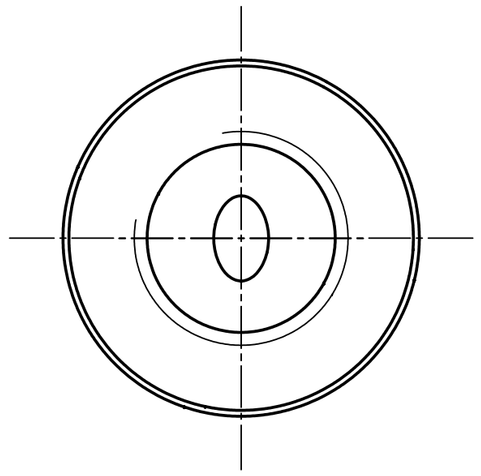

SECTION A-A

SCALE 1:1

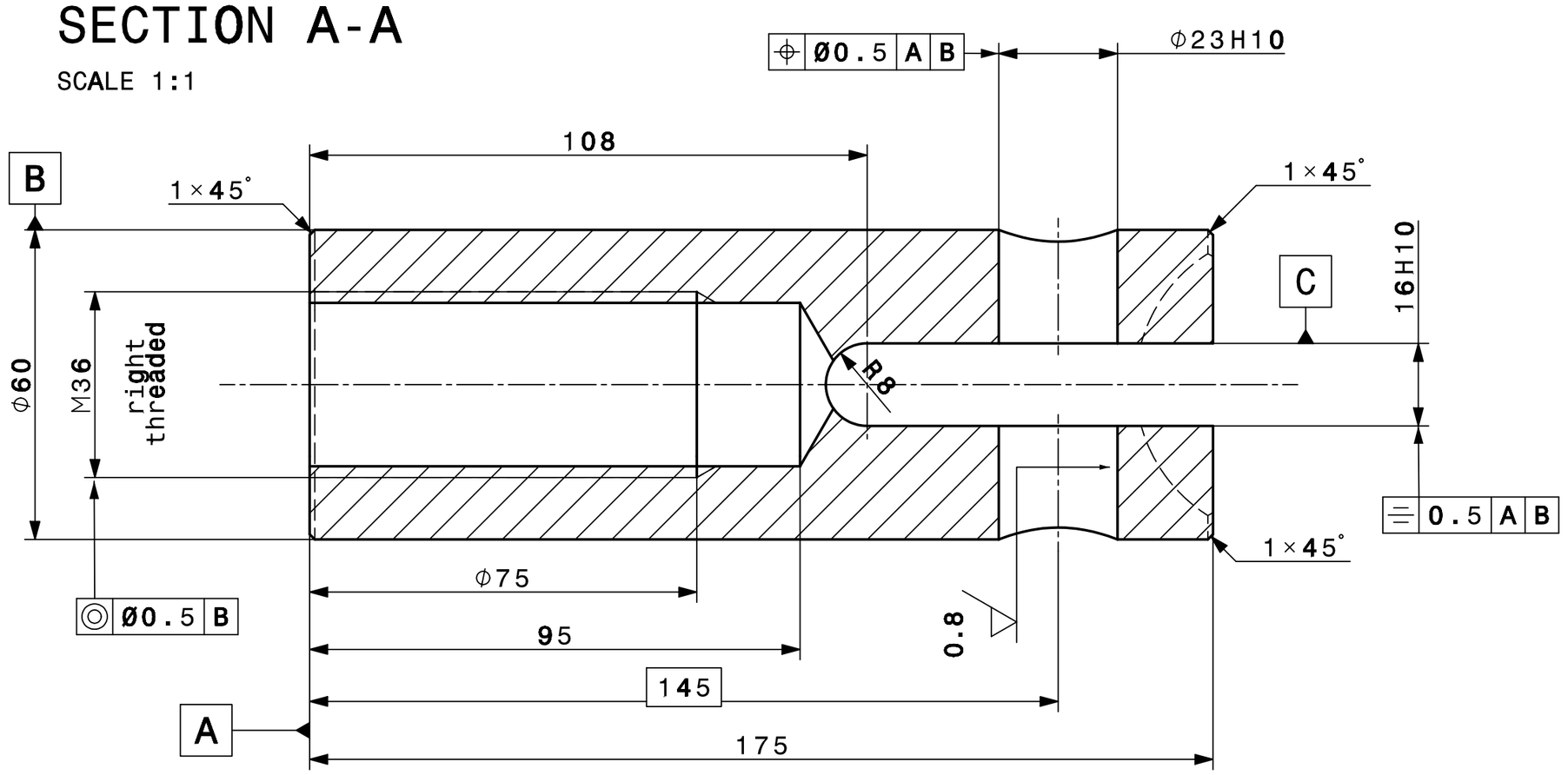

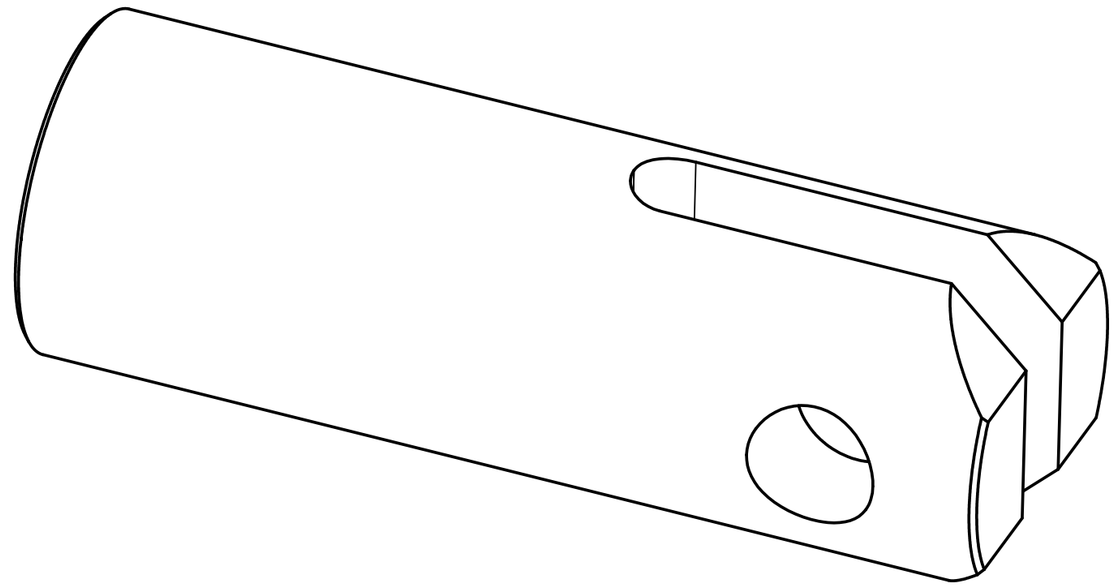

FOR TENDER - NOT VALID FOR EXECUTION

GENERAL TOLERANCES ON MACHINED PARTS : mK

Ra 1.6 (Ra 0.8)

REMOVE ALL BURRS

SEE TECHNICAL SPECIFICATION
(ALSO FOR MATERIAL AND FOR SURFACE FINISH)

NA62 RICH - Vessel - Detector	DES/DRA.	A.PEREZ	2012-08-06
	CONTROLLED	–	–
TOP LUG	RELEASED	P.WERTELAERS	2012-08-17
SCALE 1:1	APPROVED	M.LENTI	2012-08-18
	CAD Document Number	ST0423342_02	
	REPLACES		
RELEASED BY PROJECT LEADER OFFICE	FOR INFORMATION	QAC –	N62RIVSD0026
SIZE 2	IND.		

DESSIN, RUGOSITE, TOLERANCES SELON NORMES ISO
DRAWING, RUGOSITY, TOLERANCES ACCORDING TO ISO STANDARDS

PROJECTION

ORGANISATION EUROPEENNE POUR LA RECHERCHE NUCLEAIRE
EUROPEAN ORGANIZATION FOR NUCLEAR RESEARCH
GENEVE

Ce dessin ne peut être utilisé à des fins commerciales sans autorisation écrite
This drawing may not be used for commercial purposes without written authorisation