DETAIL E
SCALE: 1:1

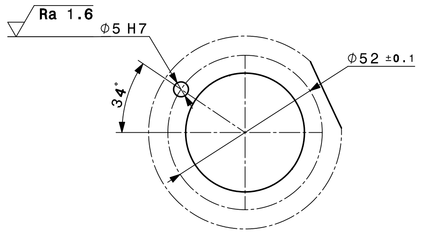

SECTION A-A
SCALE 1:10

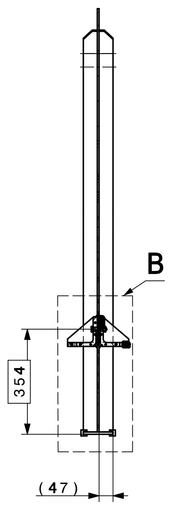

DETAIL F
SCALE: 1:1

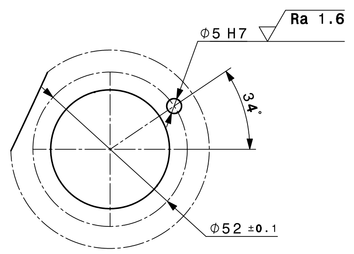

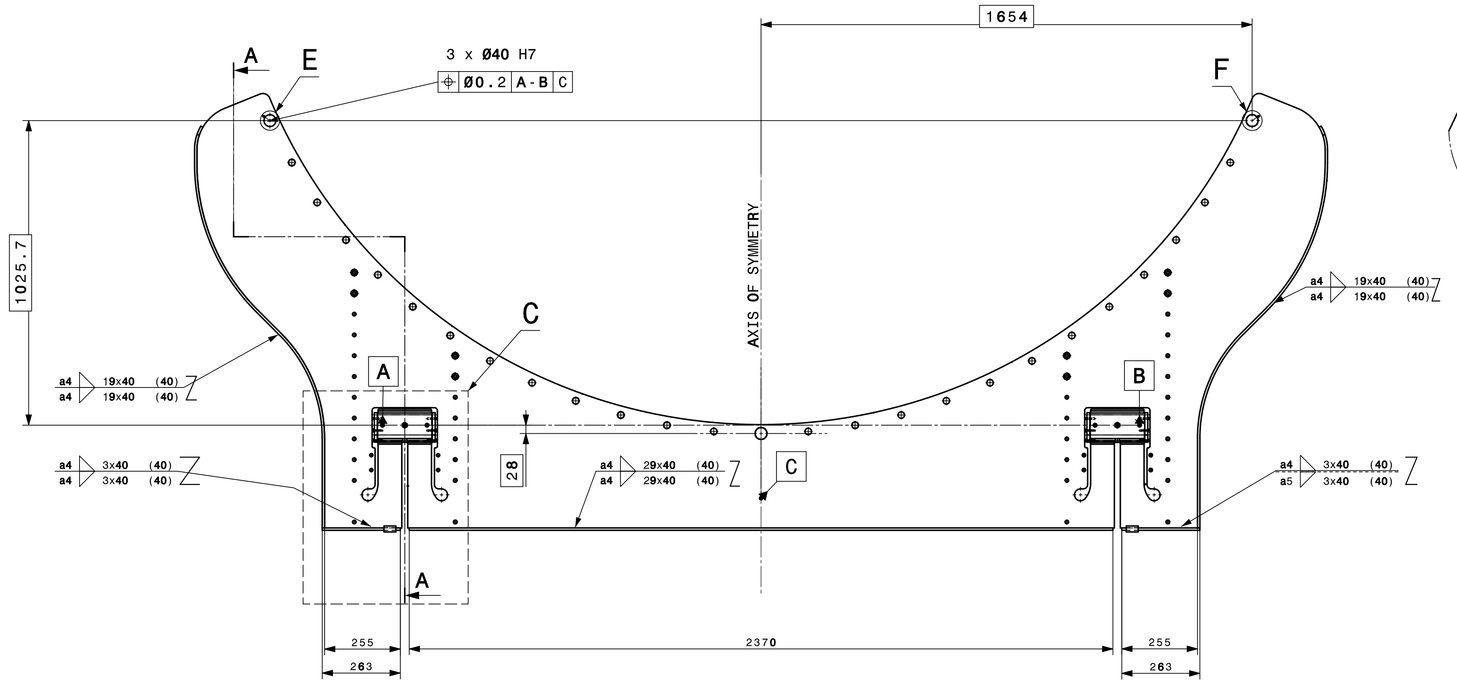

ONLY THE 3 HOLES Ø40H7 AND THE 2 HOLES Ø5H7 HAVE TO BE MACHINED AFTER WELDING
THEY ARE LOCATED FROM THE ACTUAL POSITIONS OF HOLES A, B, C

DETAIL B OF SECTION A-A
SCALE 1:1

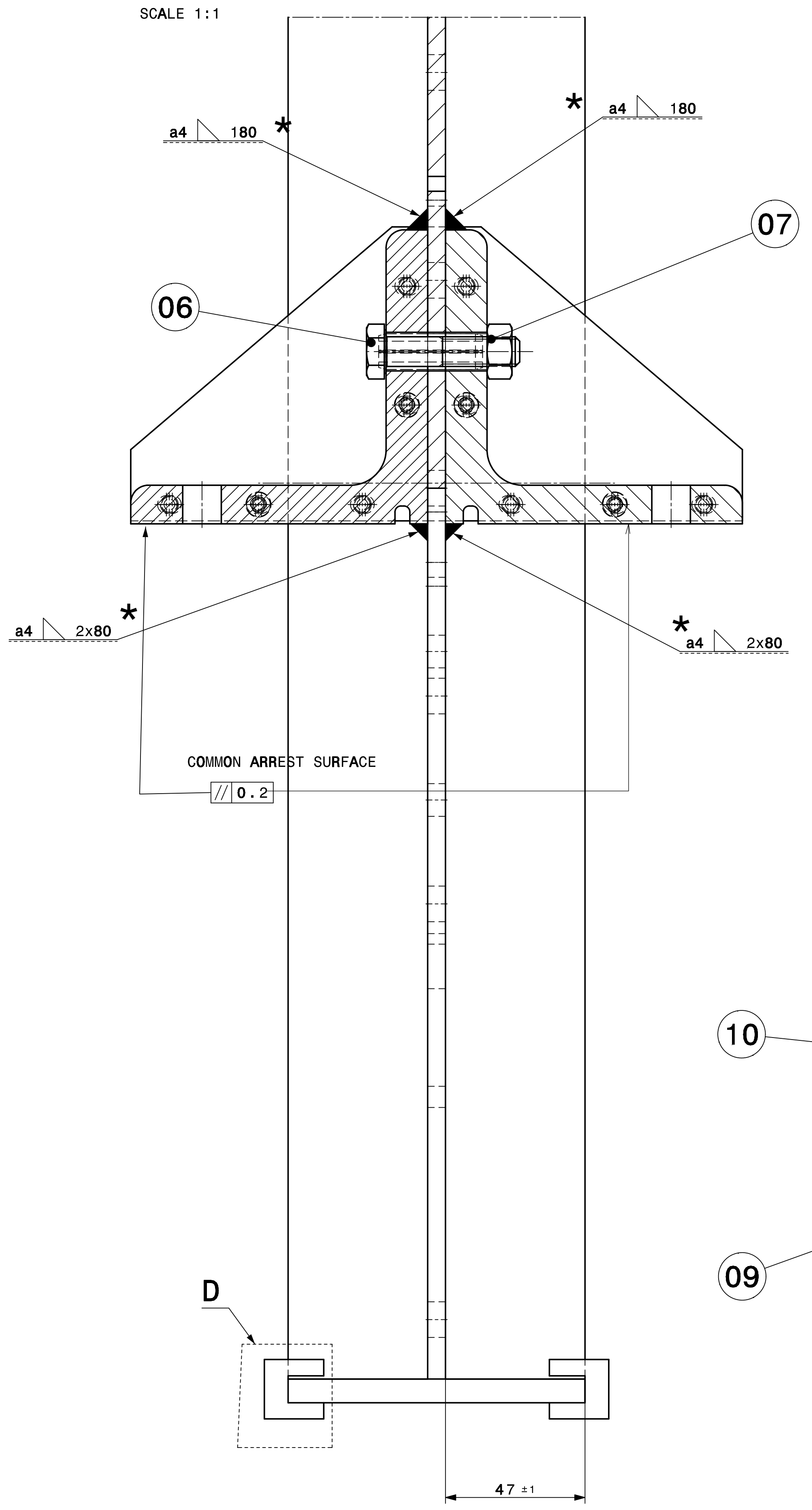

DETAIL C
SCALE 1:2

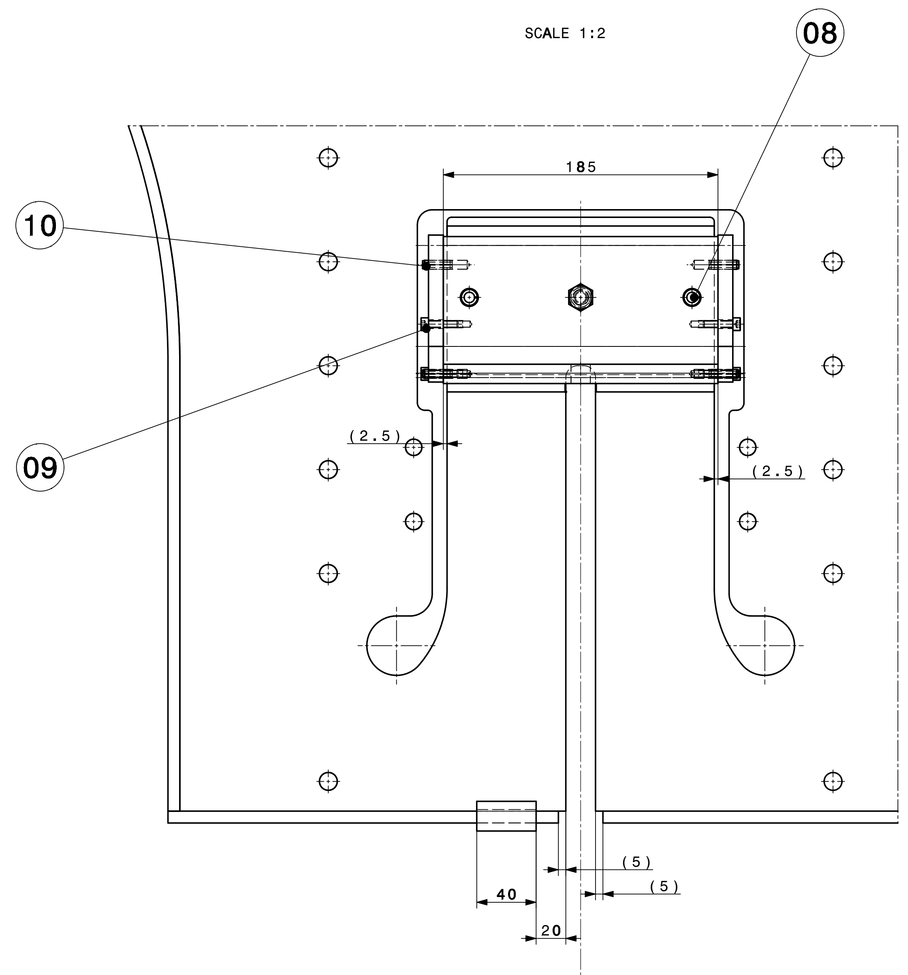

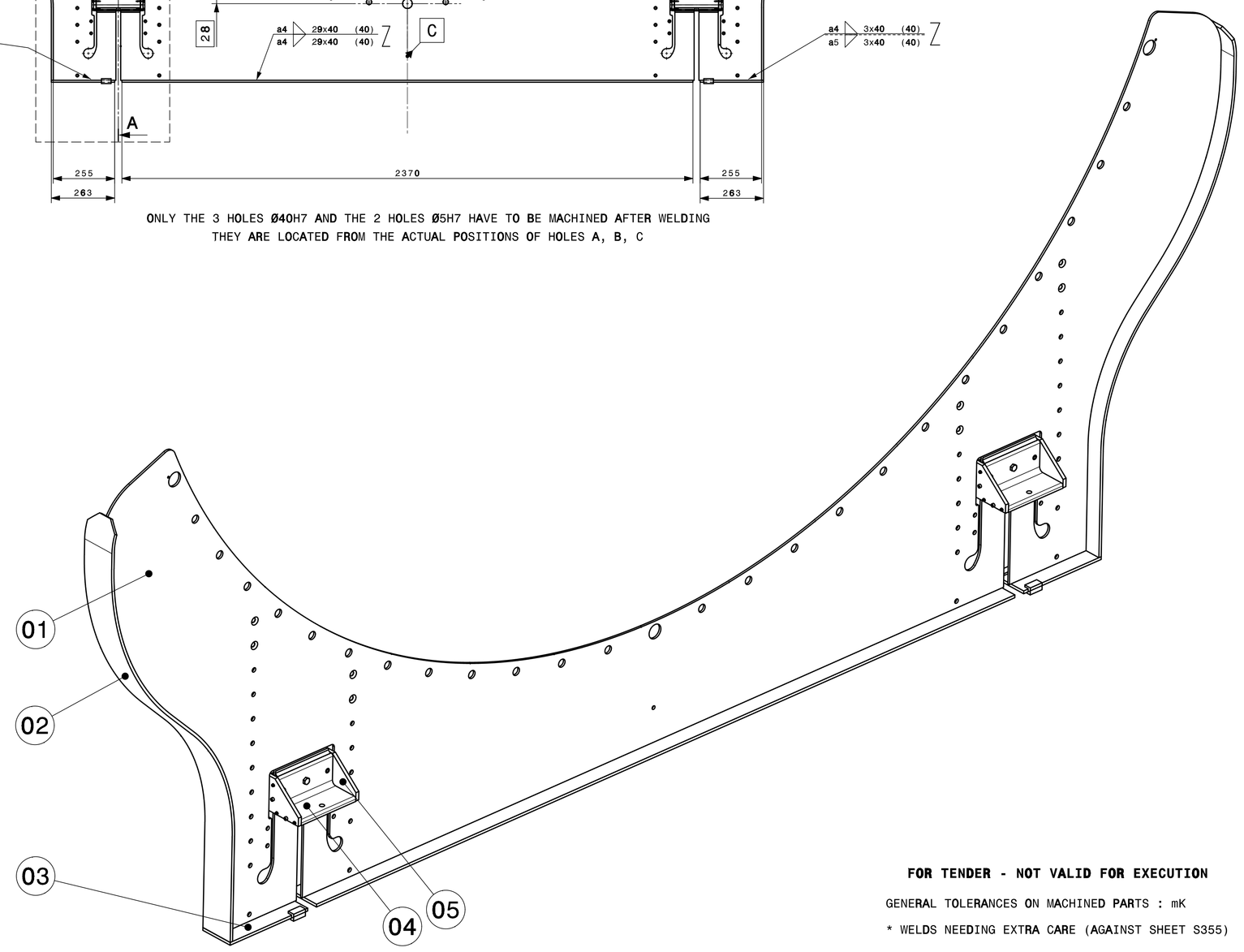

DETAIL D (4x)
SCALE 2:1

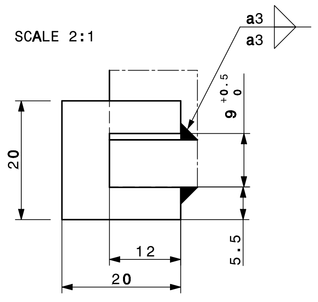

FOR TENDER - NOT VALID FOR EXECUTION

GENERAL TOLERANCES ON MACHINED PARTS : mK

* WELDS NEEDING EXTRA CARE (AGAINST SHEET S355)

REMOVE ALL BURRS

SEE TECHNICAL SPECIFICATION
(ALSO FOR MATERIAL AND FOR SURFACE FINISH)

MASS : 165 kg

QUA	DESCRIPTION	POS	MAT.	OBSERVATIONS	REF.CERN
24	SLOT HEAVY DUTY SPRING PIN 6X20	10	Steel	ISO 8752_6x20-St-Bk	
	GOUPILLE ELAST FENDUE 6X20		Acier	Traité, noirci | Black finished	
16	HEX SKT HD CAP SCREW_M5X20	9	Steel 8.8	ISO 4762_M5x20-8.8-AOC	
	VIS CHC_M5X20			Zinga. jaune dichromate | Zn yellow dichr	
4	SLOT HEAVY DUTY SPRING PIN 12X35	8	Stainless Steel A2	ISO 8752_12x35-A2	
	GOUPILLE ELAST FENDUE 12X35		Acier Inox A2		
2	HEX NUT STYLE1 GRADE A M10	7	Steel 8	ISO 4032_M10-8-Bk	47.43.81
	ECROU H STYLE1 GRADE A M10		Acier 8	Noirci oxyde | Black oxidized	100.5
2	HEX HD SCREW GRADE A_M10X45	6	Steel 8.8	ISO 4014_M10x45-8.8-AOU	47.62.80
	VIS H GRADE A_M10X45			Zingue | Zn coated	364.9
4	ANCHOR	5		N62RIVSD0010	
				ST0423398	
4	L BEAM	4		N62RIVSD0009	
				ST0423394	
1	FRONT SUPPORT LOWER RIBBON	3		N62RIVSD0033	
				ST0423422	
2	D3 FRONT SUPP. LATER.RIBBON	2		N62RIVSD0038	
				ST0428146	
1	D3 FRONT COLLAR BARE SHEET	1		N62RIVSD0034	
				ST0428144	

ENS/ASS — S.ENS/S.ASS

NA62 RICH - Vessel - Detector

D3 FRONT COLLAR WELDED SHEET

SCALE 1:1	DES/DRA.	P.LENDIR 2012-07-31
	CONTROLLED	–
	RELEASED	P.MERTELAERS 2012-08-17
	APPROVED	M.LENTI 2012-08-18
	CAD Document Number	ST0428143_02
	REPLACES	

RELEASED BY PROJECT LEADER OFFICE — FOR INFORMATION — DAC – — N62RIVSD0035 — SIZE 0 — IND.

DESIGN DIMENSIONS TOLERANCES
DRAWING INSERTING TOLERANCES
PRODUCTION

CERN
EUROPEAN ORGANIZATION FOR NUCLEAR RESEARCH
ORGANISATION EUROPEENNE POUR LA RECHERCHE NUCLEAIRE
GENEVA SWITZERLAND
GENEVE SUISSE