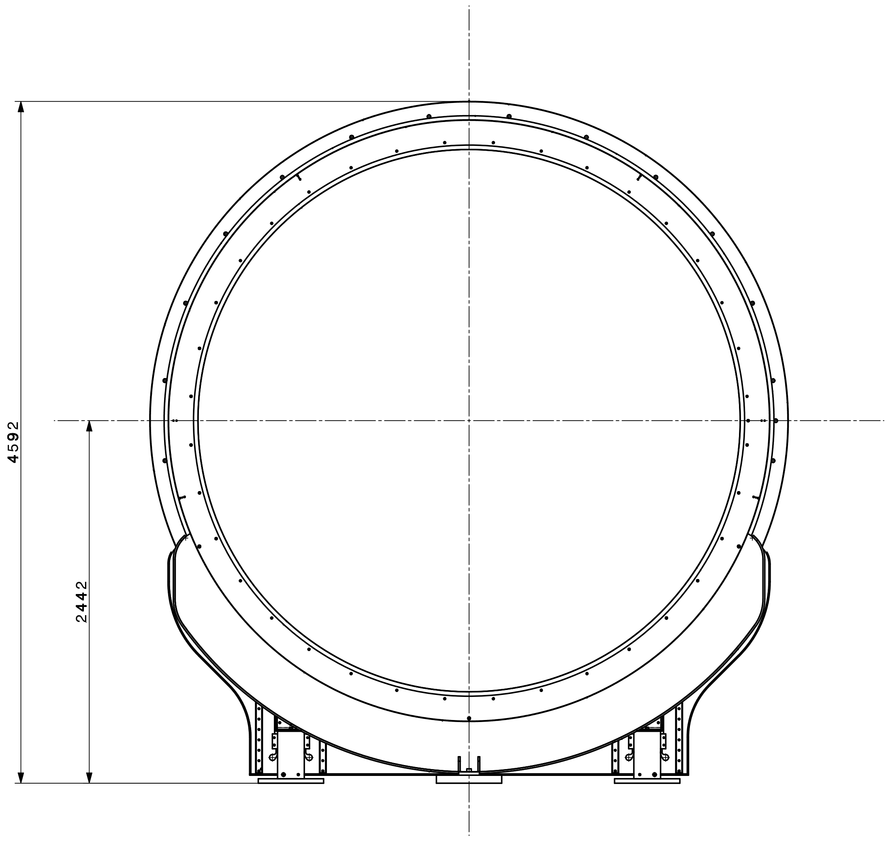


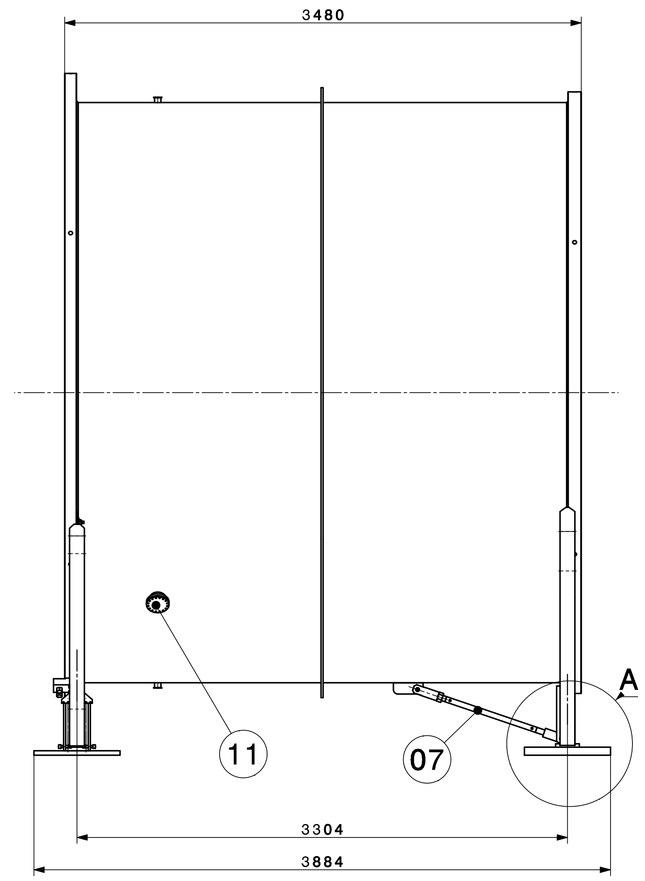


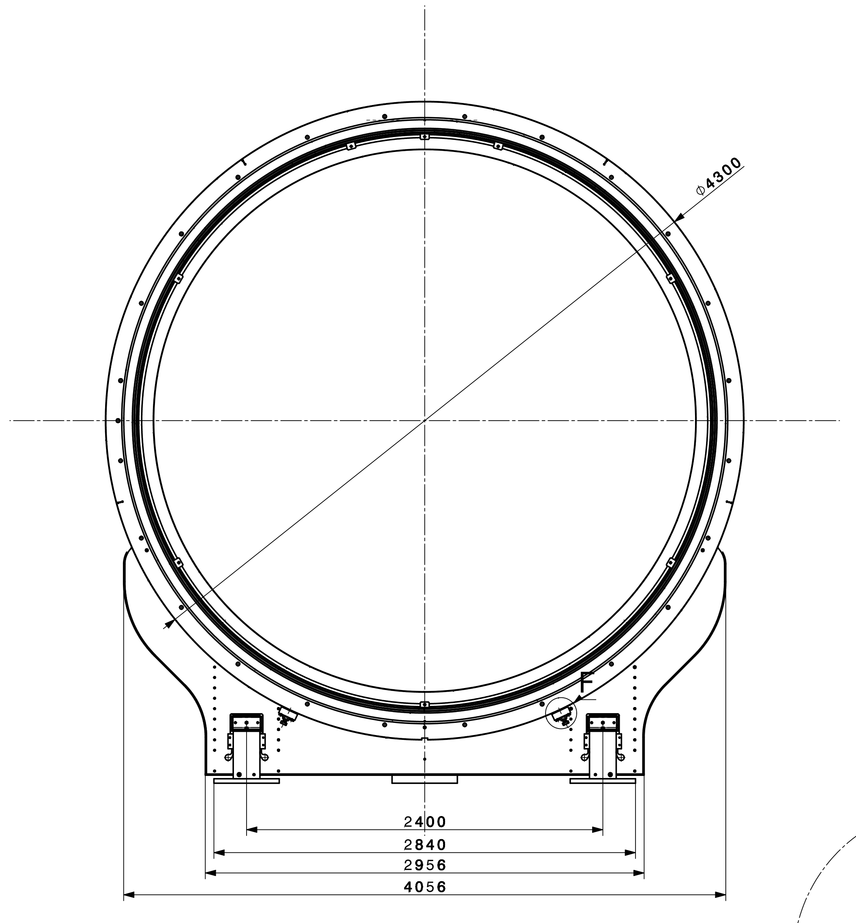


DETAIL A

SCALE 1:5

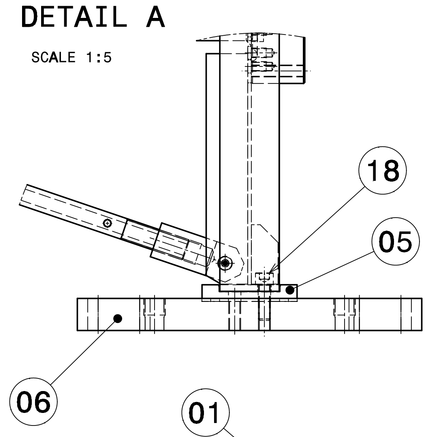


DETAIL F

SCALE: 1:2

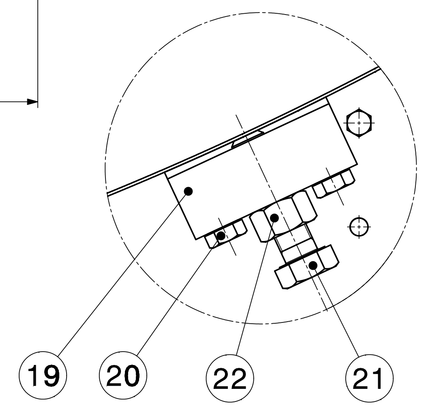


**FOR TENDER - NOT VALID FOR EXECUTION**

DELIVERY : HOLES COVERED AND LEAK-TIGHT - SEE TECHNICAL SPECIFICATION

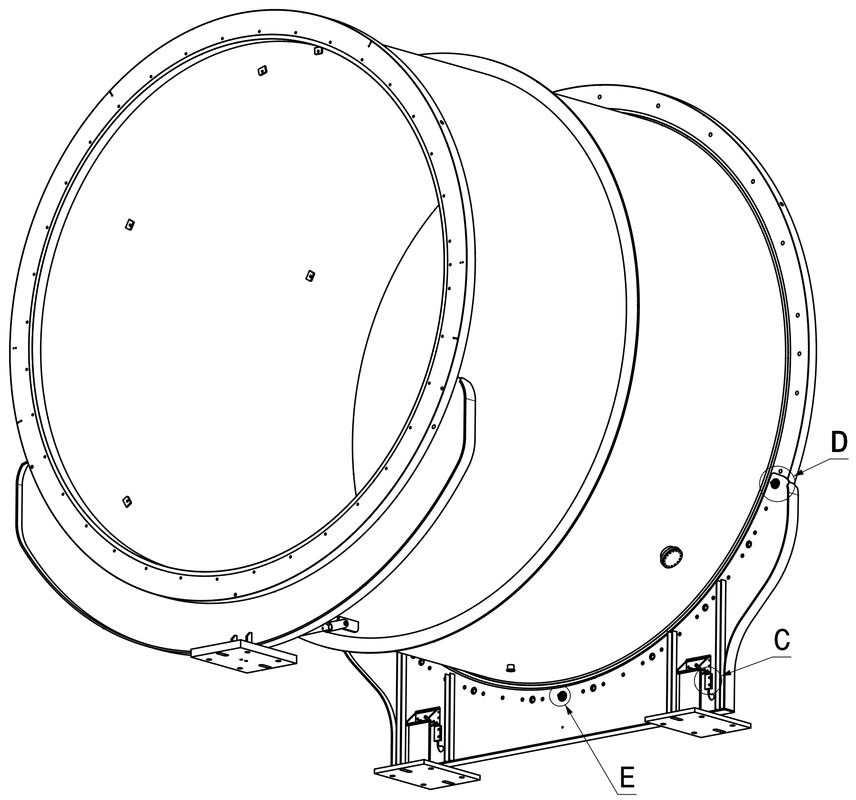


DETAIL E

SCALE 1:2

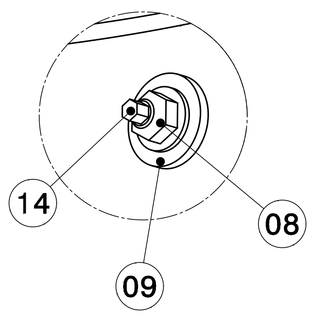


DETAIL D

SCALE 1:2

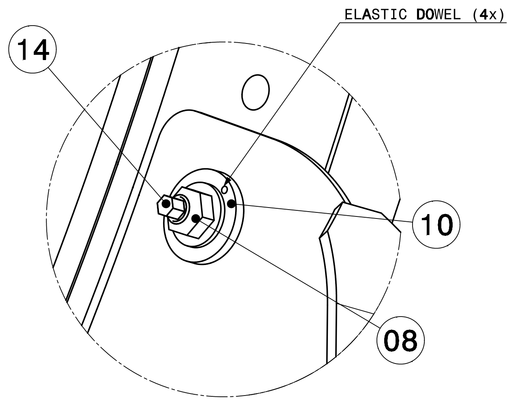


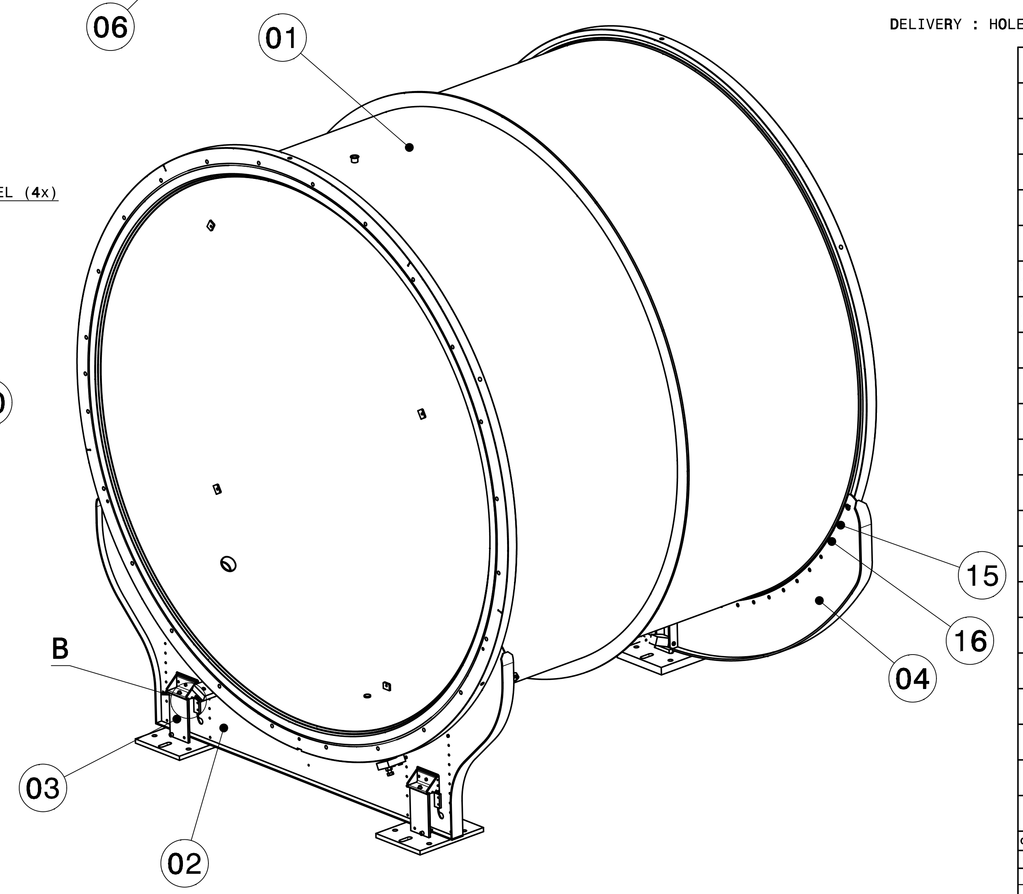


DETAIL C

SCALE 1:5

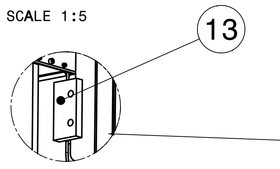


DETAIL B

SCALE 1:5

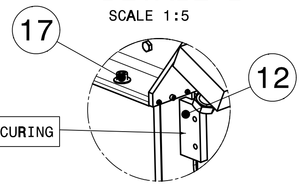


LEAF SPRING SECURING

| QUA | DESCRIPTION | POS | MAT. | OBSERVATIONS | REF.CERN |
|---|---|---|---|---|---|
| 2 | HEX NUT STYLE1 GRADE A M24<br>ECROU H STYLE1 GRADE A M24 | 22 | Steel 8<br>Acier 8 | ISO 4032_M24-8-A0U<br>Zingue \| Zn coated | 47.41.65<br>240.0 |
| 2 | HEX HD SCREW GRADE A M24X90<br>VIS H GRADE A M24X90 | 21 | Steel 8.8<br>Acier 8.8 | ISO 4017_M24x90-8.8-A0U<br>Zingue \| Zn coated | |
| 4 | HEX HD SCREW GRADE A M16X80<br>VIS H GRADE A M16X80 | 20 | Steel 8.8<br>Acier 8.8 | ISO 4017_M16x80-8.8-A0U<br>Zingue \| Zn coated | |
| 2 | SUPPORT BLOCK FOR CAP | 19 | | N62RIVSD0082<br>ST0442419 | |
| 1 | HEX SKT HD CAP SCREW_M20X60<br>VIS CHC_M20X60 | 18 | Steel 8.8 | ISO 4762_M20x60-8.8-A0C<br>Zingue, jaune dichromate \| Zn yellow dichr | |
| 4 | HEX SKT HD CAP SCREW_M12X40<br>VIS CHC_M12X40 | 17 | Steel 8.8 | ISO 4762_M12x40-8.8-A0C<br>Zingue, jaune dichromate \| Zn yellow dichr | |
| 48 | WASHER 17X40X3 | 16 | | ST0424991 | |
| 48 | HEX SKT HD CAP SCREW_M16X30<br>VIS CHC_M16X30 | 15 | Steel 8.8 | ISO 4762_M16x30-8.8-A0C<br>Zinga, jaune dichromate \| Zn yellow dichr | |
| 6 | DRUM MATING STUD | 14 | | N62RIVSD0005<br>ST0433238 | |
| 4 | LEAF SPRING SECUR-COUNTER LUG | 13 | | N62RIVSD0068<br>ST0433543 | |
| 4 | LEAF SPRING SECURING - LUG | 12 | | N62RIVSD0067<br>ST0433542 | |
| 2 | BLIND FLANGE FOR CF100 | 11 | | N62RIVSD0002<br>ST0432965 | |
| 4 | DRUM MATING WASHER "SIDE" | 10 | | N62RIVSD0020<br>ST0423334 | |
| 2 | DRUM MATTING WASHER "BOTTOM" | 9 | | N62RIVSD0019<br>ST0423337 | |
| 6 | DRUM MATING NUT | 8 | | N62RIVSD0018<br>ST0423335 | |
| 1 | DRUM TSP ANCHOR(REAR)ASSY | 7 | | N62RIVSD0063<br>ST0423346 | |
| 1 | PEDESTAL PLATE REAR | 6 | | N62RIVSD0066<br>ST0423324 | |
| 1 | D1 PEDESTAL WEDGE REAR | 5 | | N62RIVSD0077<br>ST0435249 | |
| 1 | D1 REAR COLLAR WELDED SHEET | 4 | | N62RIVSD0059<br>ST0430117 | |
| 2 | PEDESTAL | 3 | | N62RIVSD0022<br>ST0425013 | |
| 1 | D1 FRONT SUPPORT COLLAR ASSY | 2 | | N62RIVSD0076<br>ST0430094 | |
| 1 | D1 BARE DRUM | 1 | | N62RIVSD0055<br>ST0429973 | |

ENS/ASS | S.ENS/S.ASS

NA62 RICH - Vessel - Detector

DRUM 1 - ASSEMBLY

| | | |
|---|---|---|
| DES/DRA | A. PEREZ | 2012-08-13 |
| CONTROLLED | - | |
| RELEASED | P. WERTELAERS | 2012-08-29 |
| APPROVED | M. LENTI | 2012-08-30 |

SCALE 1:20

CAD Document Number: ST0429972_02

REPLACES

RELEASED BY PROJECT LEADER OFFICE | FOR INFORMATION | SAL – | N62RIVSD0054 | SIZE 0 | IND. A

| IND. | DATE | NOM/NAME | ZONE | MODIFICATION |
|---|---|---|---|---|
| A | 2012-08-29 | A. Perez | | UPDATE |

DESIGN TOLERANCES DIMENSIONS ± 0.5 ANGLES ± 0°30'
DRAWING INTERPRETATION ACCORDING TO ISO 1101 TOLERANCES
PROJECTION

CONFIDENTIAL - PROPRIETARY INFORMATION
THIS DOCUMENT IS THE PROPERTY OF THE NA62 COLLABORATION AND SHALL NOT BE REPRODUCED OR DISCLOSED TO OTHERS WITHOUT THE WRITTEN CONSENT OF THE COLLABORATION