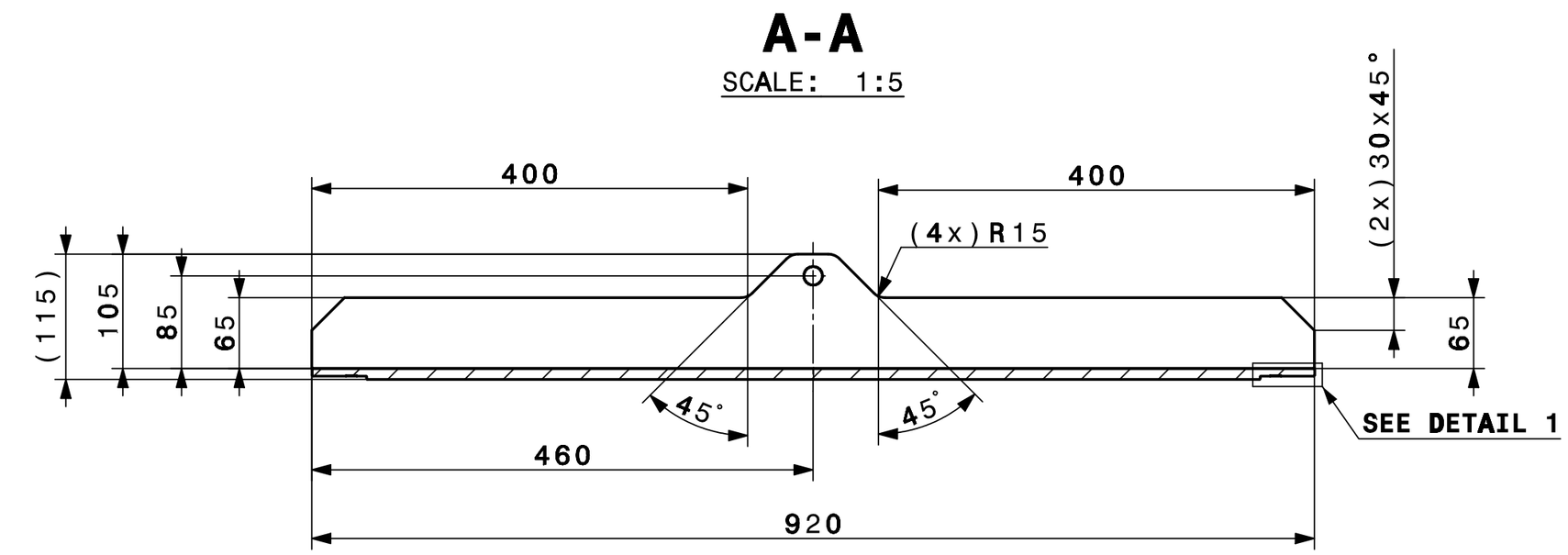

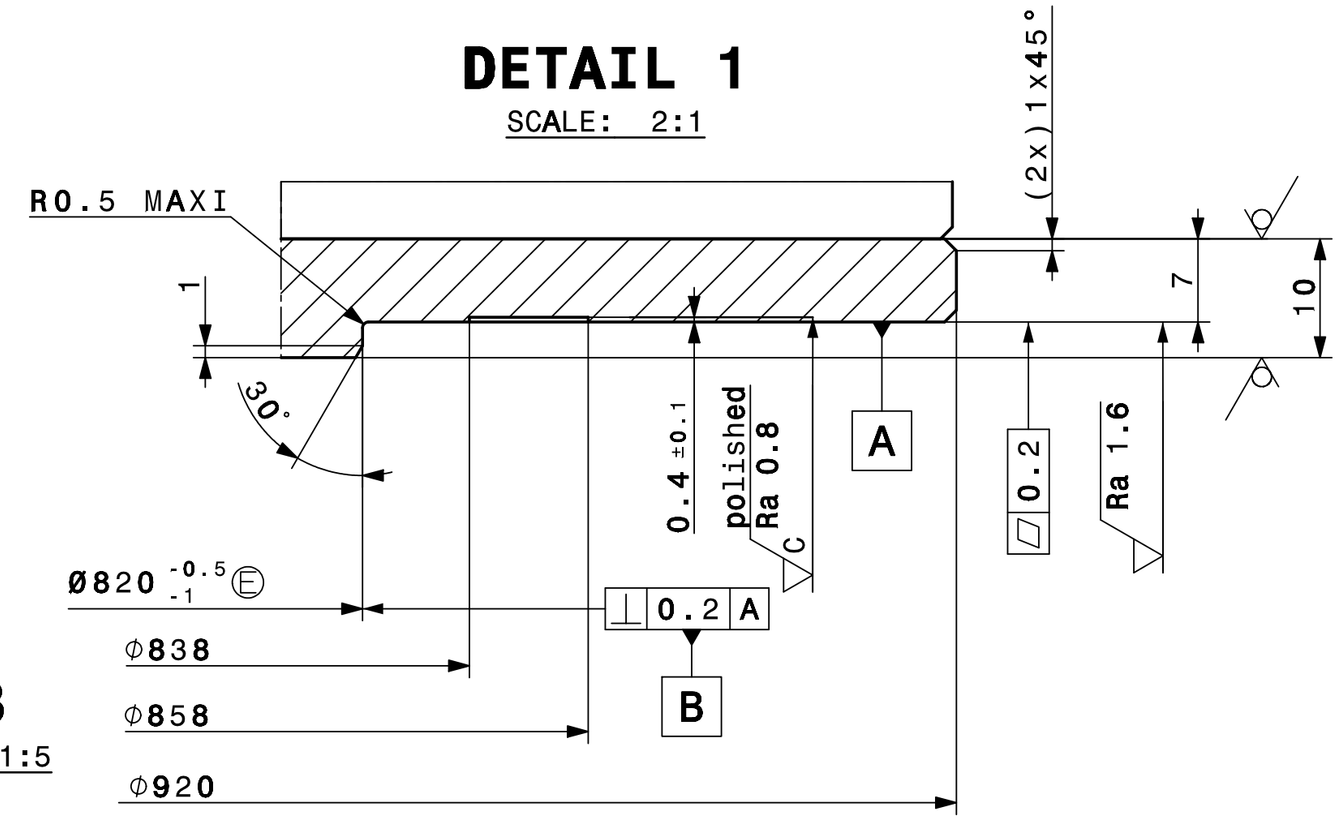

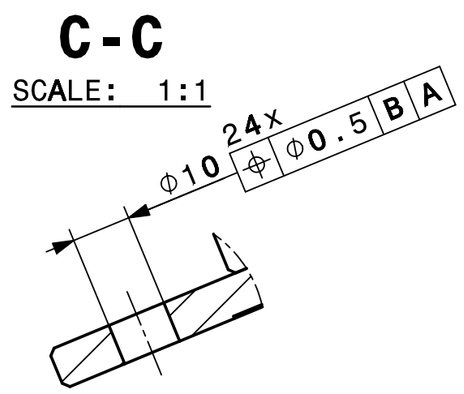

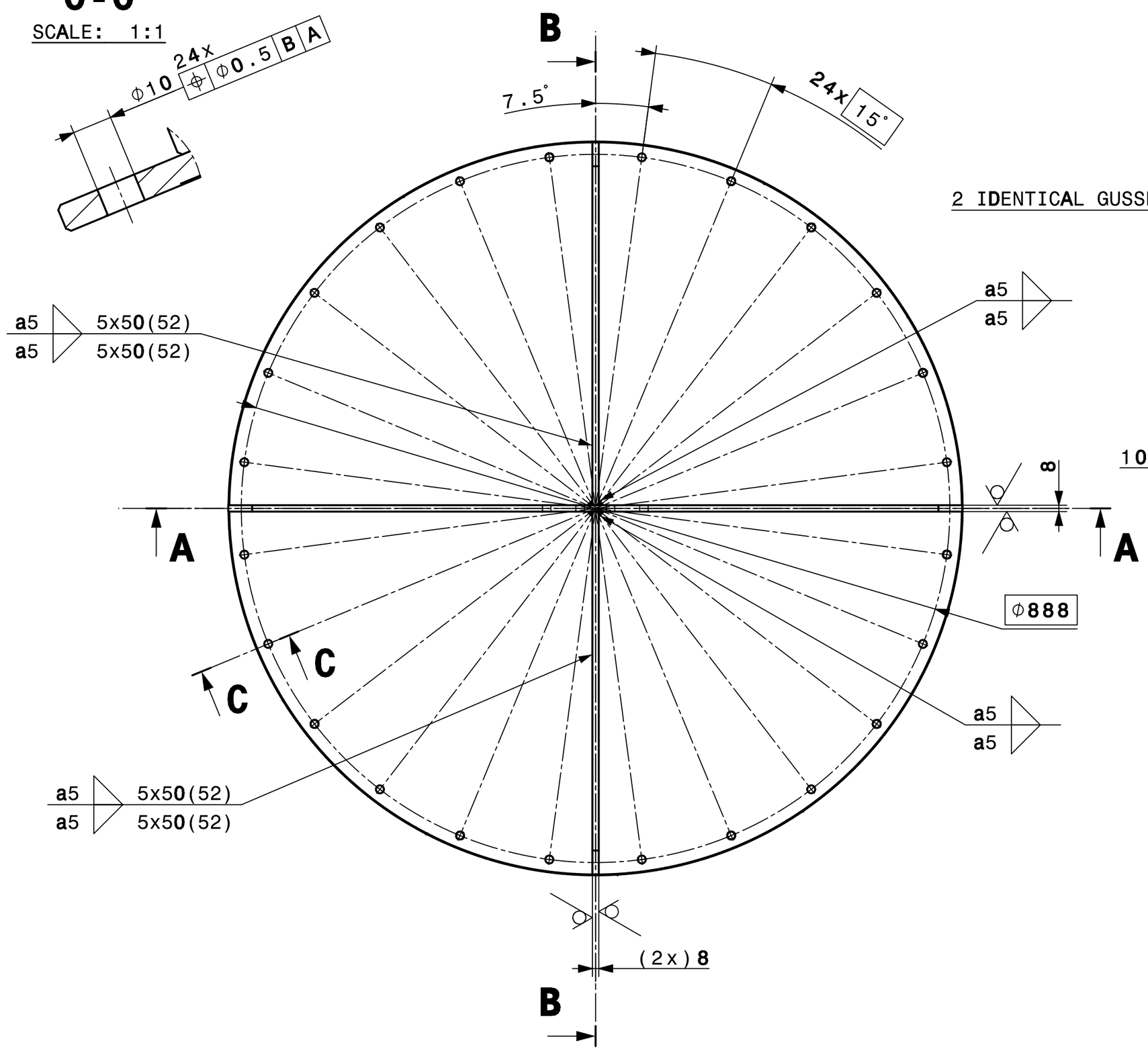

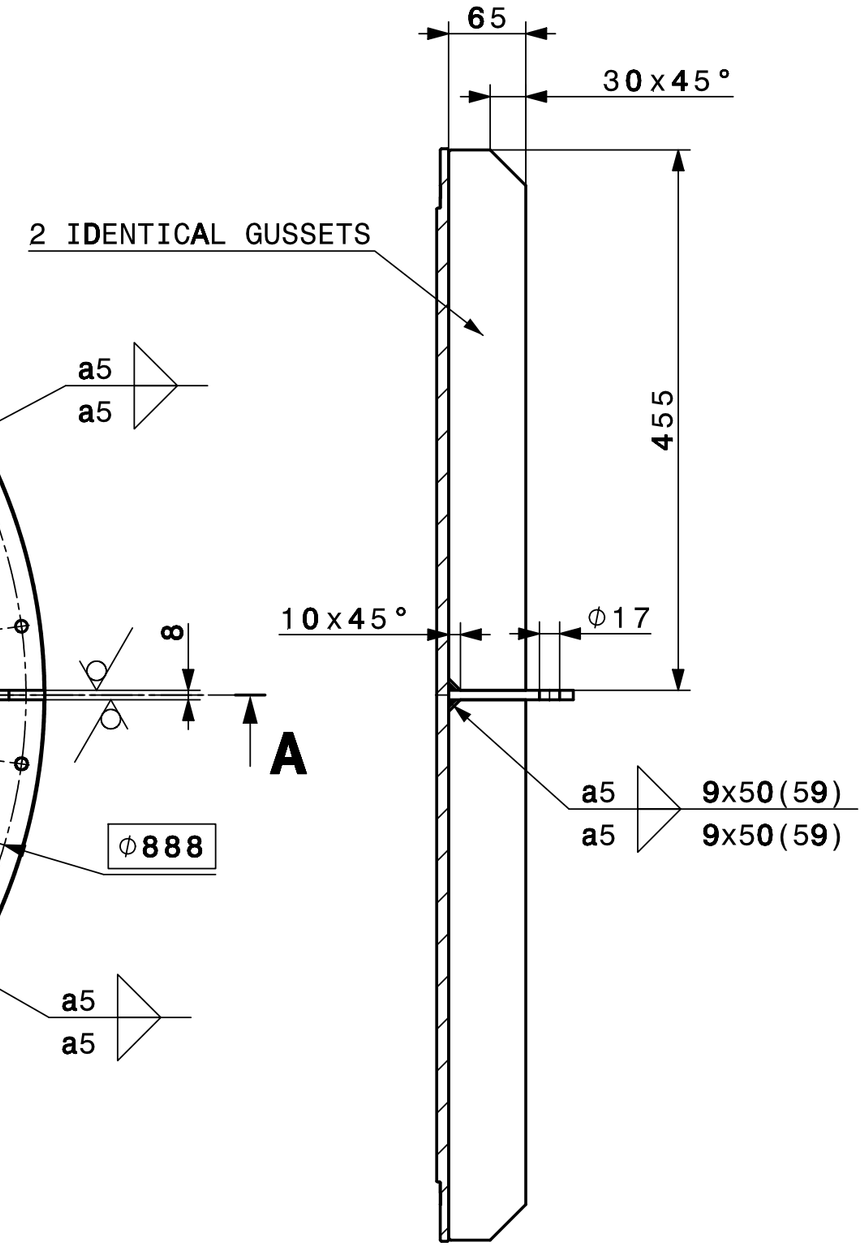

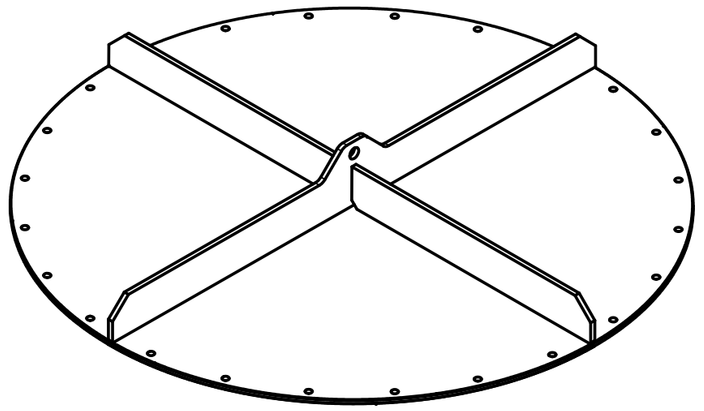

FOR TENDER - NOT VALID FOR EXECUTION

GENERAL TOLERANCES ON MACHINED PARTS : mK

Ra 3.2 (Ra 1.6 C polished Ra 0.8)

REMOVE ALL BURRS

SEE TECHNICAL SPECIFICATION
(ALSO FOR MATERIAL AND FOR SURFACE FINISH)

MASS : 58 kg

NA62 RICH - Vessel - Detector	DES/DRA.	A.PEREZ	2012-08-06
	CONTROLLED	-	-
MANHOLE COVER	RELEASED	P.WERTELAERS	2012-08-17
SCALE 1:5	APPROVED	M.LENTI	2012-08-18
	CAD Document Number	ST0428688_02	
	REPLACES		
RELEASED BY PROJECT LEADER OFFICE / FOR INFORMATION / GAC –	N62RIVSD0062	SIZE 2	IND.

DESSIN, RUGOSITE, TOLERANCES SELON NORMES ISO
DRAWING, RUGOSITY, TOLERANCES ACCORDING TO ISO STANDARDS

PROJECTION

ORGANISATION EUROPEENNE POUR LA RECHERCHE NUCLEAIRE
EUROPEAN ORGANIZATION FOR NUCLEAR RESEARCH
GENEVE

Ce dessin ne peut être utilisé à des fins commerciales sans autorisation écrite
This drawing may not be used for commercial purposes without written authorisation