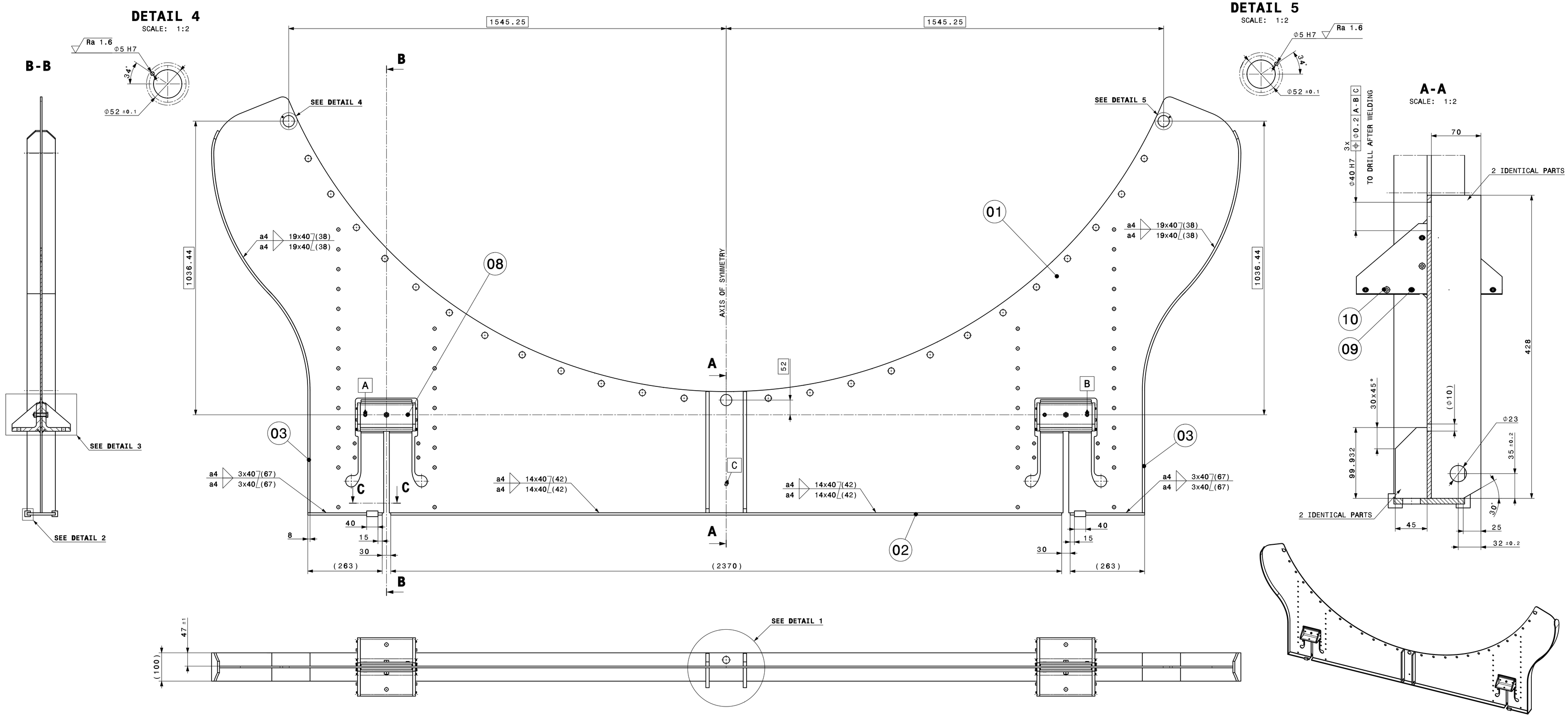

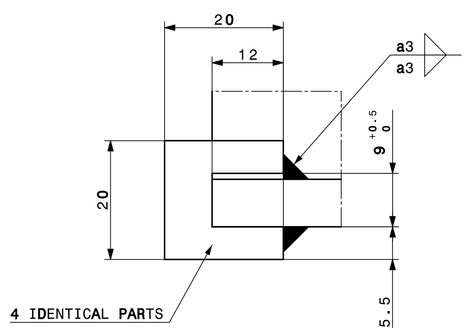

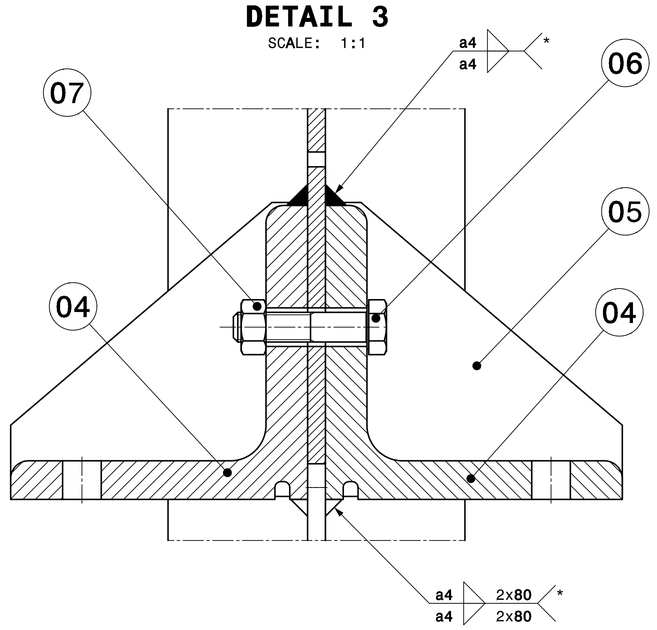

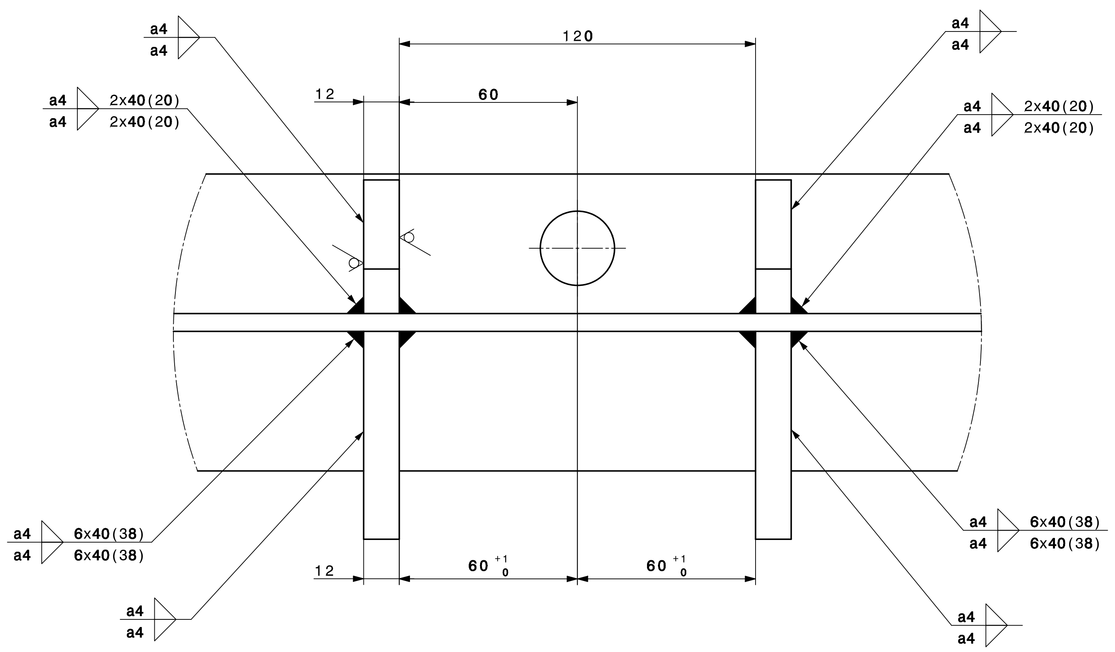

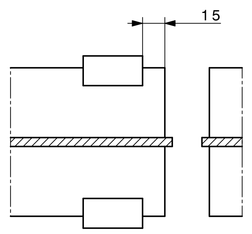

FOR TENDER - NOT VALID FOR EXECUTION

GENERAL TOLERANCES ON MACHINED PARTS : mK

* WELDS NEEDING EXTRA CARE (AGAINST SHEET S355)

REMOVE ALL BURRS

SEE TECHNICAL SPECIFICATION
(ALSO FOR MATERIAL AND FOR SURFACE FINISH)

MASS : 180 kg

QUA.	DESCRIPTION	POS.	MAT.	OBSERVATIONS	REF.CERN
16	HEX. SOCKET HEAD CAP SCREW M5x20	10	8.8 CLASS	ST0435043	
24	SPRING TYPE STRAIGHT PIN D6x20	9		ST0435040	
4	SPRING TYPE STRAIGHT PIN D12x35	8		ST0435037	
2	HEXAGON NUT M10	7	8 CLASS	ST0435034	
2	HEXAGON HEAD SCREW M10x45	6	8.8 CLASS	ST0435030	
4	ANCHOR	5		N62RIVSD0010 ST0423398	
4	L BEAM	4		N62RIVSD0009 ST0423294	
2	D4 REAR SUPPORT LATERAL RIBBON	3		N62RIVSD0070 ST0429553	
1	D4 REAR SUPPORT LOWER RIBBON	2		N62RIVSD0053 ST0434858	
1	D4 REAR COLLAR BARE SHEET	1		N62RIVSD0071 ST0429552	

ENS/ASS — S.ENS/S.ASS

NA62 RICH - Vessel - Detector

D4 REAR COLLAR WELDED SHEET

DES/DRA.	A. PEREZ	2012-07-12	
CONTROLLED	-	-	
RELEASED	P. MERTELAERS	2012-08-17	
APPROVED	M. LENTI	2012-08-18	

SCALE 1:5

CAD Document Number: ST0429546_02

REPLACES

RELEASED BY PROJECT LEADER OFFICE — FOR INFORMATION — DIM. - — N62RIVSD0072 — SIZE 0 — IND.

DESIGN, MANUFACTURE TOLERANCES ACCORDING TO ISO 1101 — DRAWING, MODELING TOLERANCES ACCORDING TO ISO 14405

PROJECTION

CERN