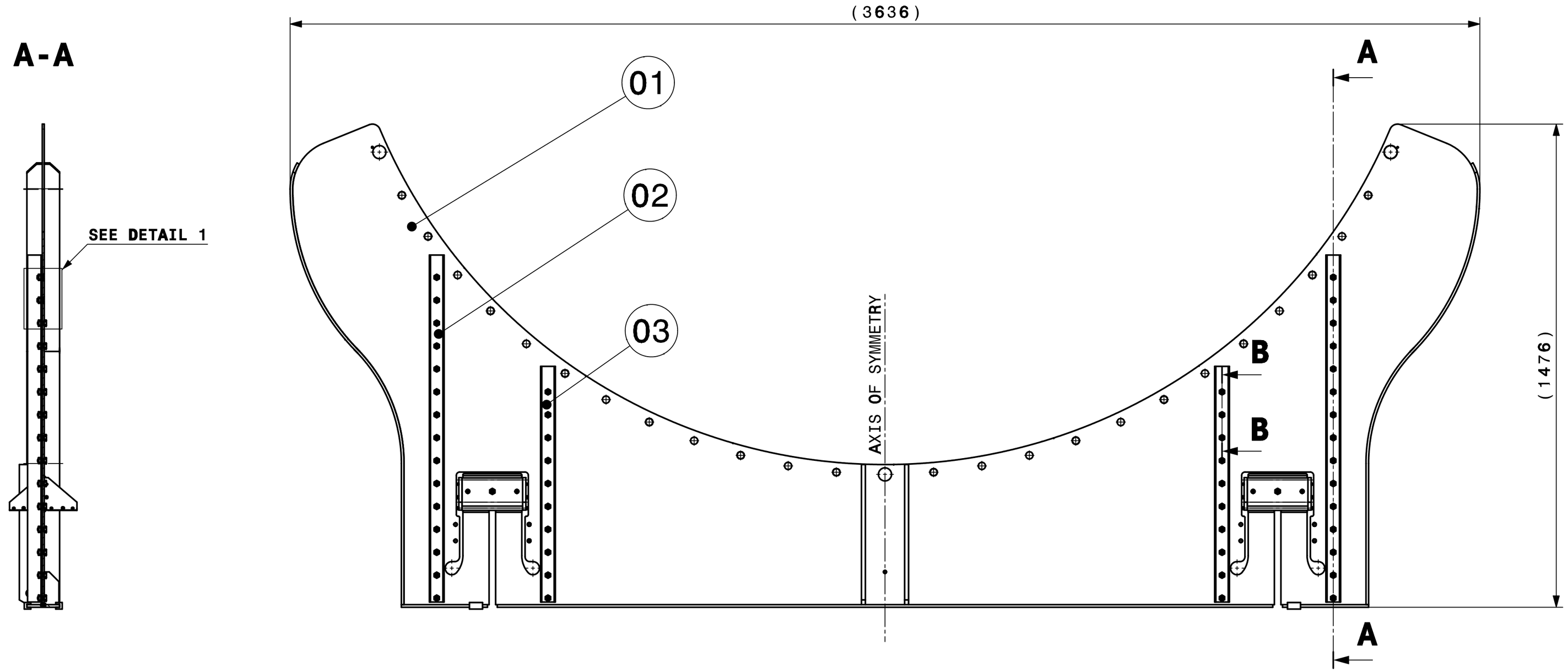

DETAIL 1

SCALE: 1:2

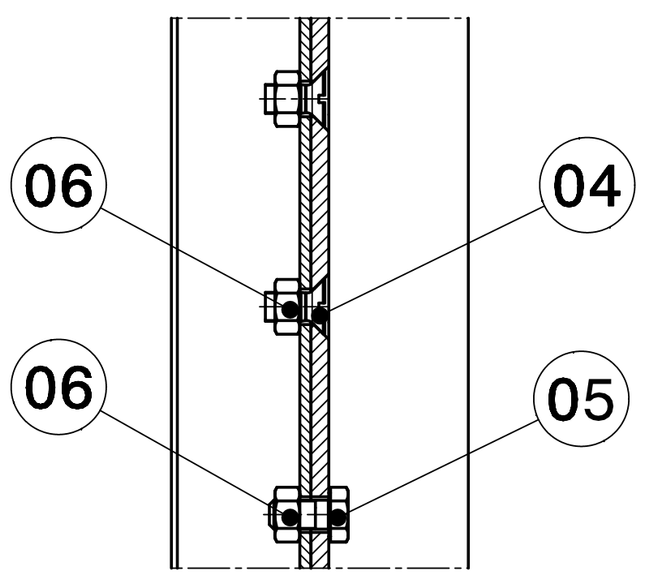

B-B

SCALE: 1:2

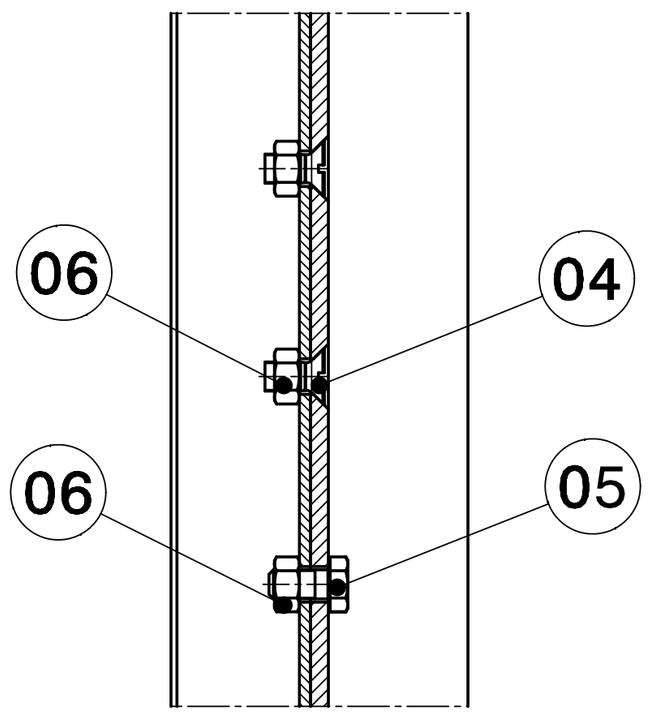

FOR TENDER - NOT VALID FOR EXECUTION

QUA	DESCRIPTION	POS	MAT.	OBSERVATIONS	REF.CERN
46	HEX NUT STYLE1 GRADE A M10	6	Steel 8	ISO 4032_M10-8-Bk	47.43.81
	ECROU H STYLE1 GRADE A M10		Acier 8	Noirci oxyde | Black oxidized	100.5
38	HEX HD SCREW GRADE A M10X20	5	Steel 8.8	ISO 4017_M10x20-8.8-A0C	
	VIS H GRADE A M10X20		Acier 8.8	Zingue, jaune dichromate | Zn yellow dichr	
8	CSK SLOT FLAT HD SCREW M10X20	4	Steel 8.8	ISO 2009_M10x20-8.8-A0U	
	VIS TETE FEND FRAIS M10X20		Acier 8.8	Zingue | Zn coated	
2	D4 REAR CHANNEL BEAM SHORT	3	Steel	N62RIVSD0021	
				ST0434714	
2	D4 REAR CHANNEL BEAM LONG	2		N62RIVSD0024	
				ST0434715	
1	D4 REAR COLLAR WELDED SHEET	1		N62RIVSD0072	
				ST0429546	

ENS/ASS | S.ENS/S.ASS

NA62 RICH - Vessel - Detector

D4 REAR SUPPORT COLLAR ASSEMBLY

SCALE 1:10

DES/DRA.	P.LENOIR	2012-07-31
CONTROLLED	-	-
RELEASED	P.WERTELAERS	2012-08-17
APPROVED	M.LENTI	2012-08-18
CAD Document Number	ST0429544_02	
REPLACES		

RELEASED BY PROJECT LEADER OFFICE | FOR INFORMATION | QAC - | N62RIVSD0073 | SIZE 2 | IND.

DESSIN, RUGOSITE, TOLERANCES SELON NORMES ISO
DRAWING, RUGOSITY, TOLERANCES ACCORDING TO ISO STANDARDS

PROJECTION

ORGANISATION EUROPEENNE POUR LA RECHERCHE NUCLAIRE
EUROPEAN ORGANIZATION FOR NUCLEAR RESEARCH
GENEVE

Ce dessin ne peut être utilisé à des fins commerciales sans autorisation écrite
This drawing may not be used for commercial purposes without written authorisation