DETAIL C

SCALE 10:1

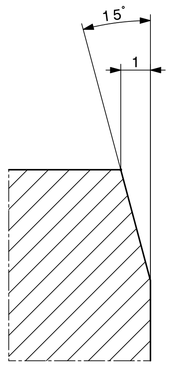

SECTION A-A

SCALE 1:1

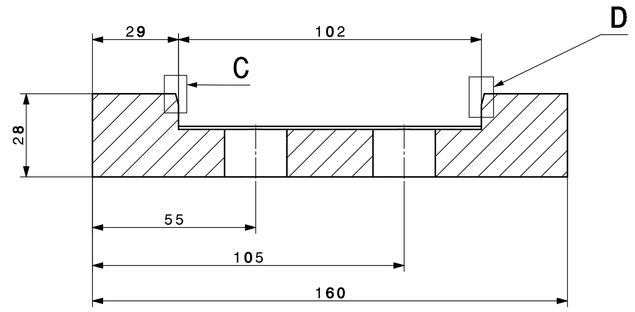

DETAIL D

SCALE 10:1

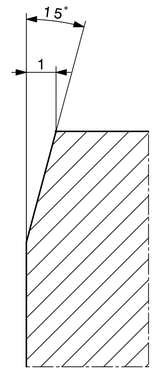

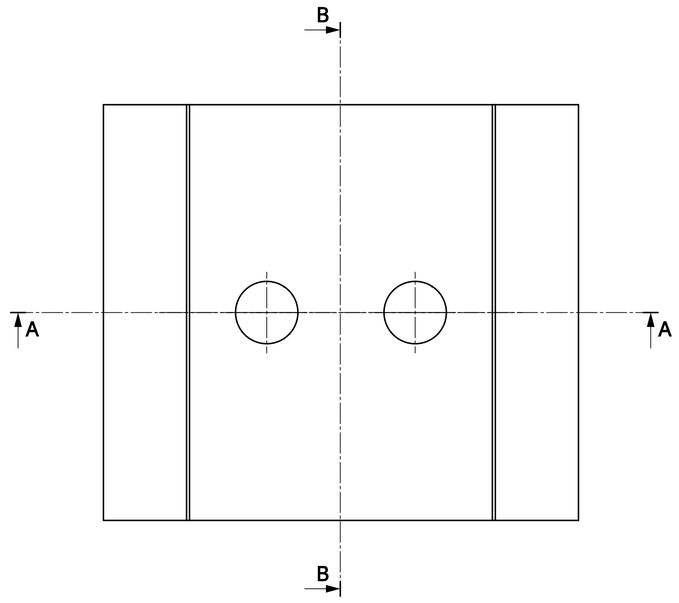

SECTION B-B

SCALE 1:1

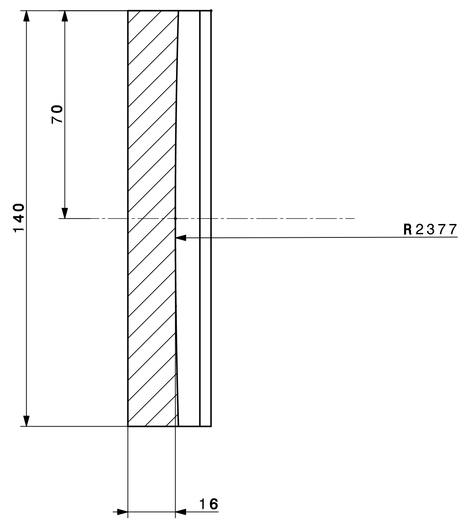

FOR TENDER - NOT VALID FOR EXECUTION

GENERAL TOLERANCES ON MACHINED PARTS : mK

Ra 1.6

REMOVE ALL BURRS

SEE TECHNICAL SPECIFICATION
(ALSO FOR MATERIAL AND FOR SURFACE FINISH)

NA62 RICH - Vessel - Detector	DES/DRA	A. PEREZ	2012-08-08
	CONTROLLED	-	-
D1 PEDESTAL WEDGE REAR	RELEASED	P. MERTELAERS	2012-08-29
SCALE 1:1	APPROVED	M. LENTI	2012-08-30
	CAD Document Number: ST0435249_02		
	REPLACES		
RELEASED BY PROJECT LEADER OFFICE	FOR INFORMATION	DWG. –	N62RIVSD0077 SIZE 0 IND. A

IND.	DATE	NOM/NAME	ZONE	MODIFICATION
A	2012-08-30	A. Perez		16 REPLACE 15.5 IN SECTION B-B

DIGITAL DIMENSIONS, TOLERANCES AND DATUMS ARE DEFINED IN DRAWING REFERENCE TO ISO STANDARDS

PROJECTION

CERN EUROPEAN ORGANIZATION FOR NUCLEAR RESEARCH
ORGANISATION EUROPEENNE POUR LA RECHERCHE NUCLEAIRE
THIS DRAWING IS THE PROPERTY OF CERN. IT MUST NOT BE LENT OR REPRODUCED WITHOUT WRITTEN AUTHORISATION