DETAILS OF PRESSURE RING SECURING
AND OF TIGHTNESS SURFACE PROTECTION
TO BE DEFINED BY CONTRACTOR

DETAIL F
SCALE 1:5

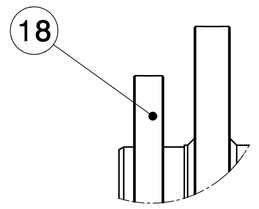

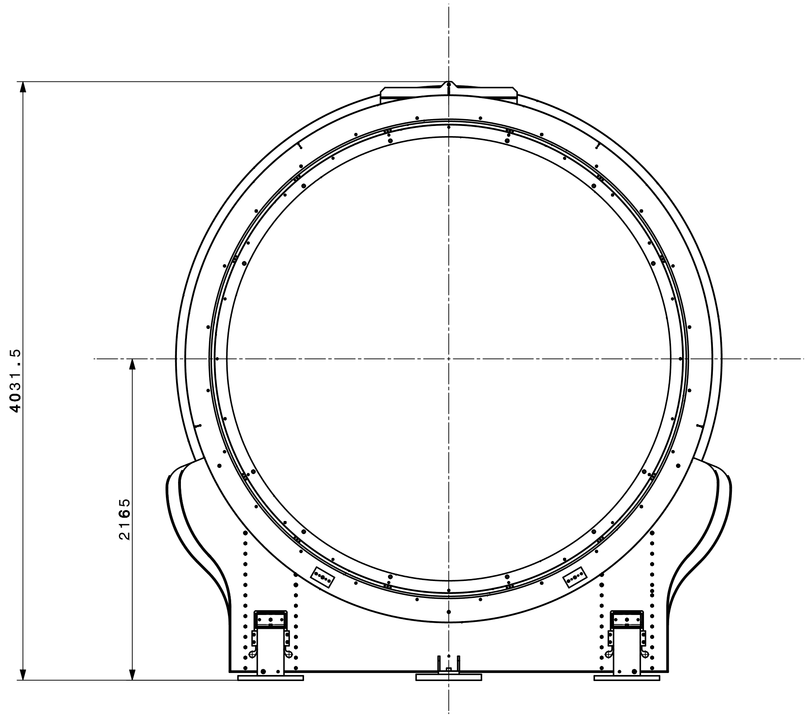

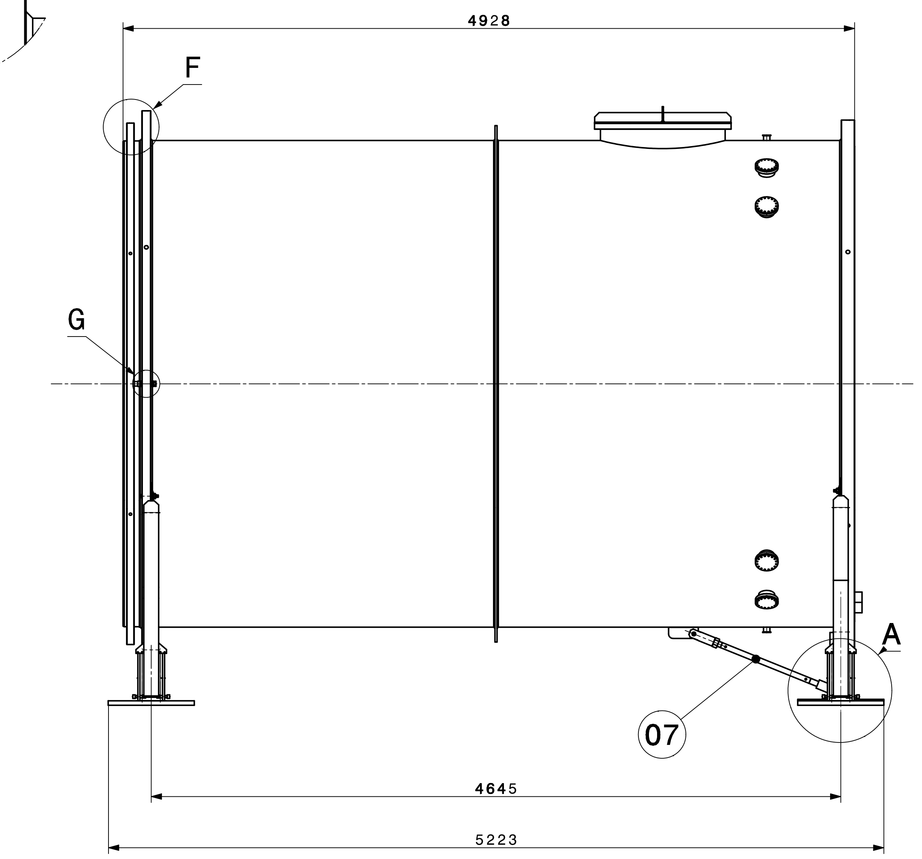

DETAIL H
SCALE 1:2

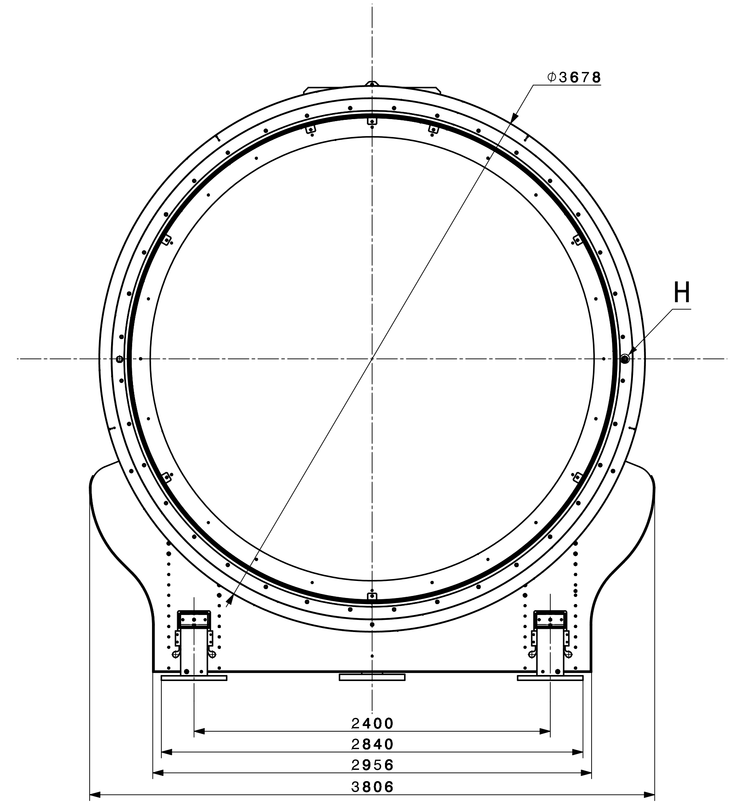

DETAIL G
SCALE 1:2

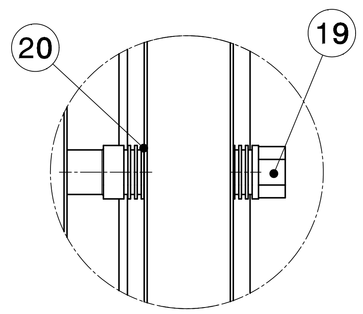

DETAIL A
SCALE 1:5

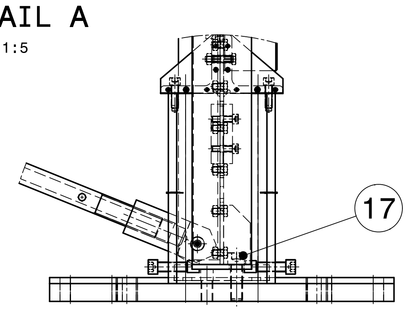

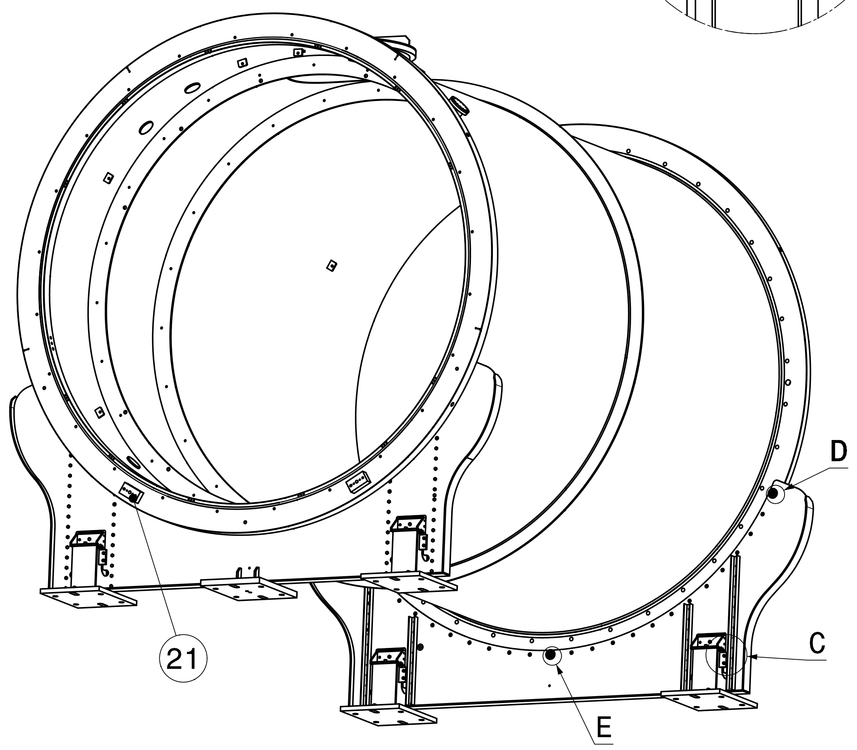

DETAIL E
SCALE 1:2

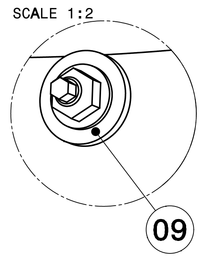

DETAIL D
SCALE 1:2

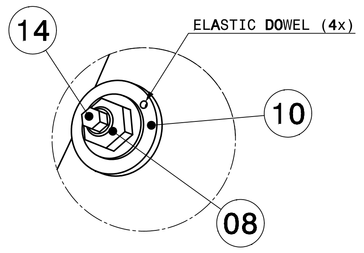

DETAIL C
SCALE 1:5

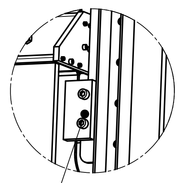

DETAIL B
SCALE 1:5

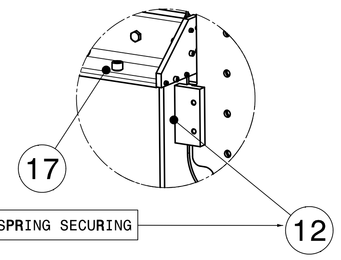

LEAF SPRING SECURING

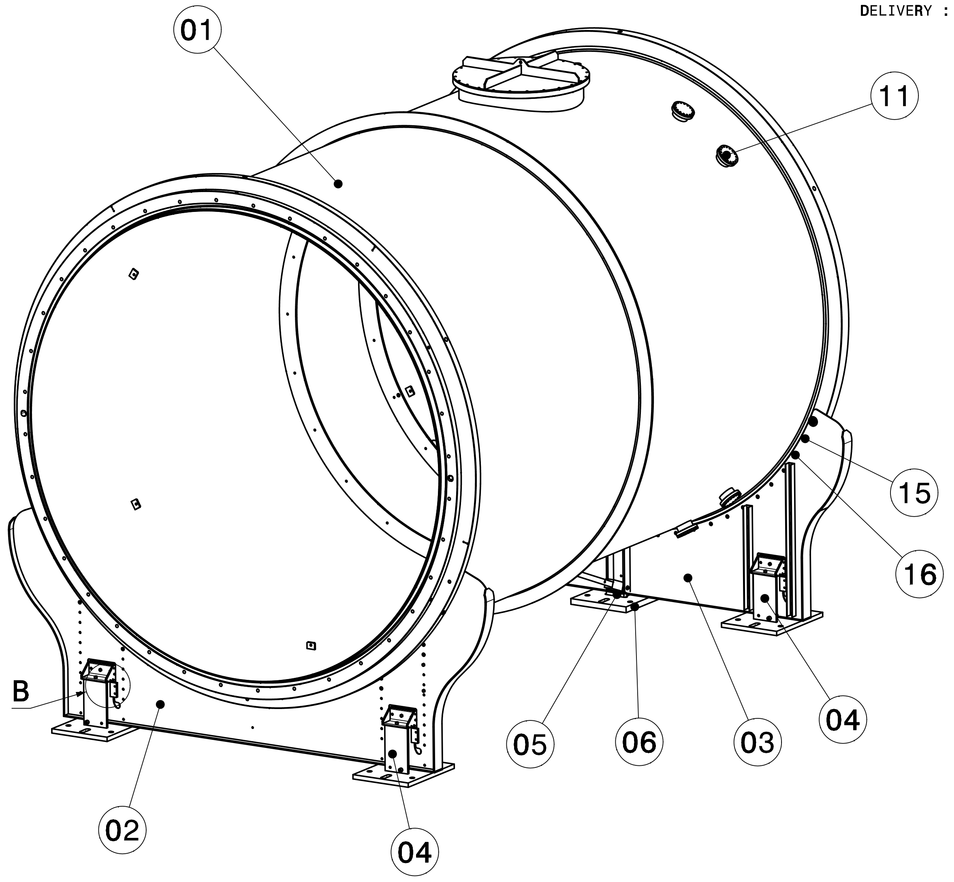

FOR TENDER - NOT VALID FOR EXECUTION

DELIVERY : HOLES COVERED AND LEAK-TIGHT - SEE TECHNICAL SPECIFICATION

QUA	DESCRIPTION	POS	MAT.	OBSERVATIONS	REF.CERN
2	SUPPORT BLOCK FOR RING	21	Steel	N62RIVSD0069 ST0433874	
4	CIRCLIPS DIN 6799 Ø 30	20		ST0434176	
2	CAMSHAFT FOR PRESSURE RING	19		N62RIVSD0023 ST0423424	
1	PRESSURE RING 3-4	18		N62RIVSD0049 ST0428713	
9	HEX SKT HD CAP SCREW_M12X40 VIS CHC_M12X40	17	Steel 8.8	ISO 4762_M12x40-8.8-AOC Zinga, jaune dichromate | Zn yellow dichr	
48	WASHER 17X40X3	16		ST0424991	
48	HEX SKT HD CAP SCREW_M16X30 VIS CHC_M16X30	15	Steel 8.8	ISO 4762_M16x30-8.8-AOC Zinga, jaune dichromate | Zn yellow dichr	
6	DRUM MATING STUD	14		N62RIVSD0005 ST0433238	
8	LEAF SPRING SECUR-COUNTER LUG	13		N62RIVSD0068 ST0433543	
8	LEAF SPRING SECURING - LUG	12		N62RIVSD0067 ST0433542	
8	BLIND FLANGE FOR CF100	11		N62RIVSD0002 ST0432965	
4	DRUM MATING WASHER "SIDE"	10		N62RIVSD0020 ST0423334	
2	DRUM MATTING WASHER "BOTTOM"	9		N62RIVSD0019 ST0423337	
6	DRUM MATING NUT	8		N62RIVSD0018 ST0423335	
1	DRUM TSP ANCHOR(REAR)ASSY	7		N62RIVSD0063 ST0423346	
1	D4 PEDESTAL PLATE REAR	6	Steel	N62RIVSD0017 ST0434641	
1	D4 PEDESTAL WEDGE REAR	5	Steel	N62RIVSD0013 ST0434624	
4	PEDESTAL	4		N62RIVSD0022 ST0425013	
1	D4 REAR SUPPORT COLLAR ASSEMBLY	3		N62RIVSD0073 ST0429544	
1	D4 FRONT SUPP. COLLAR ASSY	2		N62RIVSD0050 ST0429397	
1	D4 BARE DRUM	1		N62RIVSD0048 ST0428712	

ENS/ASS		S.ENS/S.ASS	
NA62 RICH - Vessel - Detector			
DRUM 4 - ASSEMBLY	SCALE 1:20	DES/DRA: A. PEREZ 2012-08-08 CONTROLLED: - RELEASED: P. WERTELAERS 2012-08-29 APPROVED: M. LENTI 2012-08-30 CAD Document Number: ST0428709_02 REPLACES	
RELEASED BY PROJECT LEADER OFFICE	FOR INFORMATION	DAL -	N62RIVSD0078 SIZE 0 IND. A

IND.	DATE	NOM/NAME	ZONE	MODIFICATION
A	2012-08-29	A. Perez		UPDATE

DESIGN, DIMENSIONS, TOLERANCES
DRAWING, MATERIALS, FINISHES
CONVERSION TO ISO STANDARDS
PRODUCTION

CONFIDENTIAL
THIS DOCUMENT IS THE PROPERTY OF THE EUROPEAN ORGANISATION FOR NUCLEAR RESEARCH (CERN) AND MUST NOT BE REPRODUCED OR DISCLOSED WITHOUT WRITTEN PERMISSION