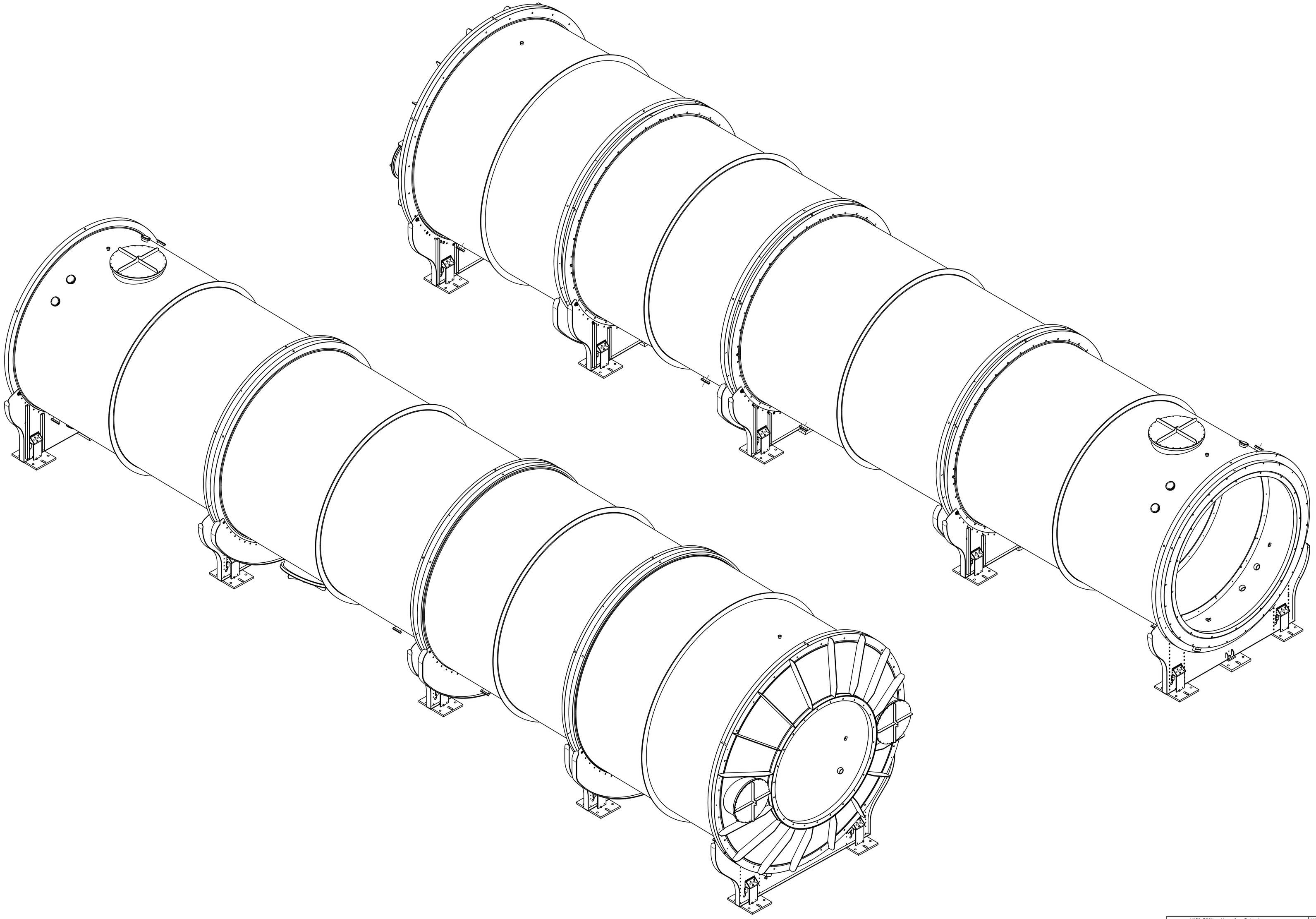

NA62 RICH - Vessel - Detector		DES/DRA.	A. PEREZ	2012-08-15
VESSEL VIEW	SCALE 1:20	CONTROLLED	-	-
		RELEASED	P. MERTELAERS	2012-08-17
		APPROVED	M. LENTI	2012-08-18
		CAD Document Number:	ST0443006_03	
		REPLACES		
RELEASED BY PROJECT LEADER OFFICE	FOR INFORMATION	UNIT: -	N62RIVSD0084	STATE: 0	IND.:

DESIGN TOLERANCES
DRAWING TOLERANCES
PRODUCTION